Republic of Iraq

Ministry of Higher Education

and Scientific Research

University of Technology

Building and Construction Eng. Dep.

DESIGEN OF WASTEWATER TREATMENT PLANT

This Project is Submitted to the Building & Construction Department of the University of Technology in Partial Fulfillment for Degree of Bachelor in Building and Construction Engineering

Preparation

FATIMA HUSSEIN ABD ALI

Supervisor

Dr. SALAH FARHAN

2011

بسم الله الرحمن الرحيم

(وقل ربي زدني علما)

صدق الله العظيم

الإهداء

تعجز الكلمات عن التعبير

فالقلب صغير...والحب كبير

إلى عائلتي الحبيبة

مهما كتبت يدي فلن أوفي حقكم علي

شكر و تقدير

الحمد لله الذي لا يبلغ مدحه المادحون ولا يحصي نعمه العادون ولا يؤدي حقه المجتهدون وصلى الله على اشرف المرسلين محمد صلى الله عليه واله وسلم

أود أن أتقدم بجزيل شكري وامتناني إلى مشرفي و أستاذي الفاضل الدكتور (صلاح فرحان) لما أبداه من جهود عظيمه و توجيهات

سديدة ومتابعه في جميع
مراحل البحث

وأخيرا ..لكل من ساندني
ولو بكلمه طيبه أقدم شكري
و امتناني والله الموفق

CONTENTS

CONTENTS OF FIGURES

The objective of the project:

The main objectives of this project are :
1-to present a full design of wastewater treatment plant for an intermediate town of 75000 capita.
2- This project will aim to :
_ Reach an acceptable levels for the disposed domestic wastewater .
_ Achieving a safe levels for re-use of the treated wastewater in a different fields e.g. agricultural irrigation , ground water recharge ,cooling and other industrial purposes .
_To insure a sufficient degree of protection of health from adverse effects of pollution and disease transmission by controlling the quality of treated wastewater.

Section One
Municipal Wastewater

1-1 Introduction

"Municipal wastewater" is the general term applied to the liquid wastes collected from residential, commercial, and industrial areas and conveyed by means of a sewerage system to a central location for treatment.

1- 2 Components of Municipal Water Demand :

Water demand data are very useful in estimating the wastewater characteristics. The average a mount of municipal water withdrawn in this project is approximately 620 liters per capita per day (Lpcd) . This a mount includes residential, commercial, light industrial, fire fighting, public uses, and water lost or un accounted for. Factors affecting water withdrawal rates are:

1) climate, 2) geographic location, 3) size and economic conditions of the community, 4) degree of industrialization, 5) metered water supply, 6) cost of water and 7) supply pressure.

Various components of municipal water demand are discussed below.

1-2-1 Residential Water Use :

The residential or domestic water demand is the portion of municipal water supply that is used in homes. It includes toilet flush, cooking, drinking washing, bathing, watering l awn, and other uses.

1-2-3 Commercial Water Use :

Commercial establishments include motels, hotels, office building shopping centers, service, stations, airports, and the like.

1-2-4 Industrial Water Use :

Water used for industrial processes such as fabrication, processing, washing, and cooling, and the like.

1-2-5 Public Water Use :

Water used in public buildings (city halls, jails, schools, etc.) as well as water used for public services including fire protection, street washing and park irrigation is consider public water use.

1-2-6 Water Unaccounted For :

In a water supply system there is a certain amount of water that is lost or unaccounted for because of meter and pump slippage, leaks in mains, faulty meters and an authorized water connections.

1-2-7 Infiltration / Inflow :

Infiltration is the ground water that enters sewers through service connections, cracked pipes, defective joints, and defective pipes and manhole walls.

Inflow is the surface runoff that may enter through manhole cover, roof and are drains, and cross-connections from storm sewers and combined sewers.

1-3 Quality of Wastewater :

Municipal wastewater contains over 99.9 percent water, the remaining materials include suspended and dissolved organic and inorganic matter as well as microorganisms. These materials give physical, chemical and biological qualities that are characteristics of residential and industrial wastewaters.

1-3-1 Physical Quality :

The physical quality of municipal wastewater is generally reported in terms of temperature, color odor, and turbidity. These physical parameter are shown below:

1) Temperature : the temperature of wastewater is slightly higher than that of water supply. Temperature has effect upon microbial activity, solubility of gases and the viscosity.

2) Color : fresh wastewater is light gray. Stale or septic wastewater is dark gray or black.
3) Odor : fresh wastewater may have a soapy or oily odor, which is somewhat disagreeable. Stale wastewater has putrid odors due to hydrogen sulfide, and other products of decomposition.
4) Turbidity : turbidity in wastewater is caused by a wide variety of suspended solids- in general, stronger wastewater have higher turbidity.

1-3-2 Chemical Quality :

The chemical quality of wastewater is expressed in terms of organic and inorganic constituents-domestic wastewater generally contains 50 percent organic and 50 percent inorganic matter. A general discussion on organic components, total suspended solids, and inorganic slat of wastewater is given below.

1) total solids :organic and inorganic, settleable, suspended and dissolved matter.

a suspended (TSS) , mg/ℓ : portion of organic and inorganic solid that are not dissolved. These solids are removed by coagulation or filtration.

b Dissolved (Total), mg/ℓ : portion organic and smaller than one mill micron (m µ) fall in this category.

2) BOD_5 , mg/ ℓ : Biochemical oxygen demand (5-d, 20˚C) it represents the biodegradable portion of organic component. It is a measure of dissolved oxygen required by microorganisms to stabilize the organic matter in 5 day .

3) COD, mg/ℓ : chemical oxygen demand, it is measure of organic matter and represents the amount of oxygen required to oxidize the organic matter by strong oxidizing chemical (potassium dichromate) under acidic condition.

4)Total nitrogen (TN), mg/ℓ: total nitrogen include organic nitrogen, ammonia, nitrite, and nitrate.

5) PH: is indication of acidic or basic nature of wastewater. a solution is neutral at PH 7.

1-3-3 Microbiological Quality:

The municipal wastewater contains microorganisms that play an important role in biological waste treatment the principal groups of micro organisms include bacteria, fungi, protozoa, and algae.

Section Two
Treatment processes

Treatment Processes

Introduction :

1) Preliminary Treatment Units: It includes unit operations such as :

A- Screens: The general purpose of screens is to remove large objects such as rags, paper, plastics, metals, and the like. theses objects , if not removed may damage the pumping and sludge- removal equipment, hangover wires, and block valves, thus creating serious plant operation and maintenance problems.

B- Aerated Grit champers: It is used remove dust, bone chips, coffee grounds, seeds, eggshells, and other materials in wastewater that are nonputrescible and higher than organic matter. By the air, wastewater is freshened, thus reduction in odors and additional BOD_5 Removal may be achieved.

2) Primary Treatment: It is including primary sedimentation the purpose of this unit is to remove the settle able organic solids. Normally a primary sedimentation will remove 50-70 percent total suspended solids and 30-40 percent BOD_5.

3) Biological Treatment (Secondary Treatment) :
   The purpose of secondary treatment is to remove the soluble organics that escape the primary treatment and to provide further removal of suspended solids.
   Although secondary treatment may remove than 85 percent of the BOD_5 and suspended solids, it does not remove significant amount of nitrogen, phosphor heavy metals, no degradable organics, bacteria and viruses. These pollutants may require further removal (advanced one).

4) Advanced treatment: It is an additional treatment processes, such as filtration, carbon adsorption, chemical precipitation of phosphorus, to remove those constituents that are not adequately removed in the secondary treatment plant. These

include nitrogen, phosphorus, and other soluble organic and inorganic compounds.

2-1 Preliminary Treatment Units :

2-1-A- Screens :

Screening is normally the first unit operation used at wastewater treatment plant, used remove large objects from wastewater.

Screening devices can be broadly classified into three types:

1- Coarse screening: for spacing of (50-150) mm.
2- Medium screening: for spacing of (20-50) mm.
3- Fine screening: for spacing of (5-20) mm.

Usually fine screens are preceded b a preliminary screening for the purpose of protection.
Screens may also classified into manually and mechanically cleaned.

❖ Removal of screening:

Manually cleaned bar rakes have sloping bars that facilitate hand raking. The screening is placed on a perforated plate for drainage and storage.
The mechanically cleaned bar rakes are front-cleaned or back –cleaned, in both cases the traveling rake moves the screenings upward and drops them into a collection bin or conveyor.

❖ Disposal of screenings**:**

The disposal of the screenings is achieved by land filling or incineration, often screenings are ground and returned into the wastewater treatment plant.

❖ Design factors for screens:

1- Slope from horizontal (degrees) = (45-70).
2- Clear spacing between bars (mm) = (10-40).
3- Velocity through rack (m/s) = (0.3-1).

4- Allowable head loss, clogged screen (mm) 150.
5- Maximum head loss, clogged screen (mm) = 800.

❖ The comminutor devices :

Comminutes are grinders that cut up the material retained over screens. It is used in conjunction with coarse screens. They utilize cutting teeth or shredding devices on a rotating drum that pass through stationary combs, screens , or disks, large objects are shredded that pass through thin openings (0.6-1) cm. the comminutes are almost submerged.

Fig. (1) Mechanical Bar Screens

2-1-B- Grit Chambers:

It is necessary to remove the grits and other materials that are heavier than organic matter, in order to:

(1) Protect moving mechanical equipment and pumps from unnecessary wear and abrasion.
(2) Prevent clogging in pipes heavy deposits in channels.
(3) Prevent cementing effects on the bottom of sludge digesters and primary sedimentation tanks.
(4) Reduce accumulation of inert material in aeration basins and sludge digesters which would result in loss of usable volume.

❖ **Type of grit removal :**

1- Velocity – controlled grit channel :

It is a long narrow sedimentation basin with better control of flow through velocity.

1- An aerated grit chamber :

A Spiral current within the basin is created by the use of diffused compressed air- the air rate is adjusted to create a velocity near the bottom , low enough to allow the girt to settle, whereas the lighter organic particles are carried with the roll and eventually out basin.

❖ **Advantages of aerated grit chamber**:

The aerated grit chambers are used at medium . and large size treatment plants. They offer many advantage over the velocity – controlled grit channels . some of the advantage are follows:-

1- An aerated grit chamber can also be used for chemical addition, mixing, and flocculation a head of primary treatment .
2- Wastewater is freshened by the air, thus reduction in odors and additional BOD_5 removal may be achier.
3- Grease removal may be achieved if skimming is provided.

4- By controlling the air supply, grit of any desired size can be removed.

❖ **Collection and cleaning of grit** :

Cleaning of the grit chambers can be done either manually (for small grit chambers) , or mechanically (for large grit chambers).

Mechanical grit collection in velocity- controlled channels and aerated grit chambers is achieved by conventional with scrapers, screws, buckets, or some combination of these.

❖ **Grit disposal :**

Various methods of grit disposal include land fill, land spreading, and incineration with sludge.

For small – and medium-size plants it is best to bury and cover the grit because the residual organic content can be a nuisance.

❖ **Design factors and typical design values for aerated grit chambers:**

1) Dimensions :
   * Depth, (m) = (2-5)
   * Length (m) = (7.5-20)
   * Wide /depth ratio = (1:1)- (5:1)
   * Length / width ratio = (2.5:1) (5-1)
2) Transfers velocity at the surface = (0.6-0.8)m/s
3) Detention time at maximum flow = (2-5) min
4) Air supply = 4.6 -12.4 ℓ/ s.m of tank length

Fig (2) Grit Chamber

2-2 Primary Treatment: (Primary Sedimentation Tanks):

Primary sedimentation (or clarification) is achieved in large basins under relatively quiescent conditions . the settled solids are collected by mechanical scrapers into hopper, from which they are pumped to sludge – processing area oil, grease , and other floating materials are skimmed from the surface. The effluent is discharged over weirs into a collection trough.

❖ **Types of clarifiers**:

In general, the design of most of the clarifiers falls into three categories:

(1) horizontal flow, (2) solids contact, and (3) inclined surface.

The common types of horizontal flow clarifiers are rectangular, square, or circular . On the other hand the types of include surface are tube settler and parallel plate settler.

❖ **Sludge collection** :

- Bottom slope : The floor of the rectangular and circular tanks are sloped toward the hopper. The slope made to

facilitate draining of the tank and to move the sludge the hopper. Rectangular tanks have a slope of 1-2 percent. In circular tanks, the slope is approximately 40-100 mm/m diameter.

- Equipment : In mechanized sedimentation tanks, the type of sludge collection equipment varies with size and shape of the tank. In rectangular tanks the sludge collection equipment may consist of (1) a pair of endless conveyor chains running over sprockets attached to the shafts or (2) moving bridge sludge collectors having a scraper to push the sludge into the hopper.

❖ **Sludge removal** :

The sludge is removal from the hopper by means of a pump .

❖ **Scum removal:**

Scum that forms on the surface of the primary clarifiers is generally pushed off the surface to a collection sump.

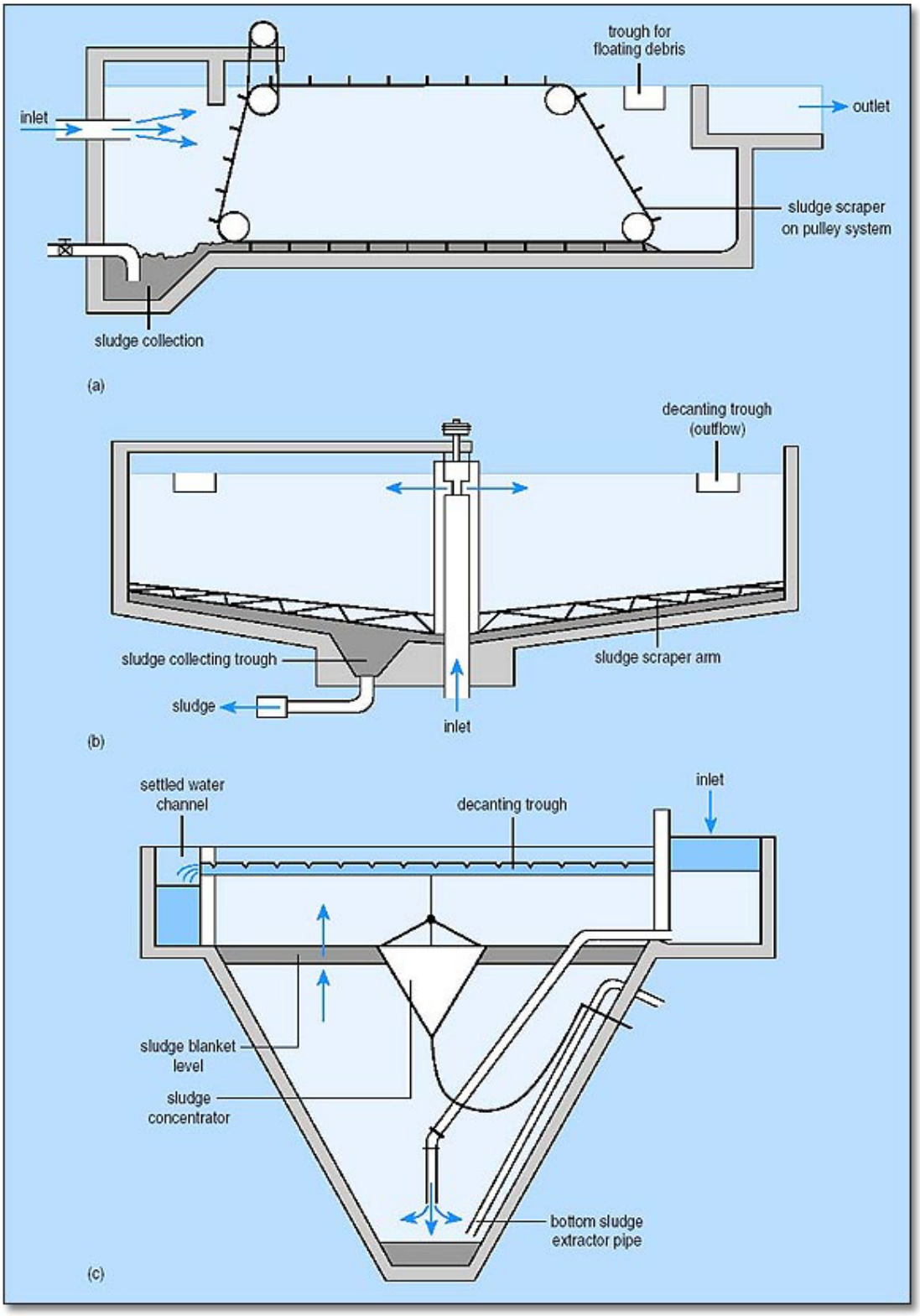

Fig (3) Typical sedimentation tanks: (a) rectangular horizontal flow tank; (b) circular, radial-flow tank; (c) hopper-bottomed, upward flow tank

2-3 Biological Treatment :

Biological waste treatment involves bringing the active microbial growth in contact with wastewater so that they can consume the impurities as food.

A great variety of microorganisms come into play that include bacteria, protozoa, rotifers, fungi, algae, and so forth . these organisms in the presence of oxygen convert the biodegradable organics into carbon dioxide, water, more cell material, and other inert products.

2-3-1 Biological Treatment Process:

Biological treatment process can be achieved by two types of growth:

1- Suspended Growth Biological Treatment :

Suspended growth treatment systems are those in which the microorganisms remain in suspension. Common suspended growth processes used for secondary treatment include:

A. Activated sludge and other modifications.
B. Aerated lagoons.
C. High –rate stabilization ponds.

2- Attached Growth Biological Treatment

In attached growth biological treatment process the population of active microorganisms is developed over a solid media (rock or plastic).the attached growth of microorganisms stabilize the organic matter as the wastewater passes over them. There are two major types of attached growth process:

A. Trickling filter.
B. Rotating Biological contractor.

❖ **1-A- Activated sludge process:**

In the activated sludge process microorganisms (MO) are mixed thoroughly with the organics so that they can grow and stabilize the organics. As the microorganisms grow and are mixed by the agitation of the air , the individual organisms clump together (flocculate) to from an active mass of microbial floc called " activated sludge" the mixture of the

activated sludge and wastewater in the aeration basin is called " mixed liquor " the mixed liquor flows from the aeration basin to a secondary clarifier where the activated sludge is settled. A portion of the settled sludge is returned to the aeration basin to maintain the proper food-to- MO ratio permit rapid breakdown of the organic matter. Because more activated sludge is produced than can be used in the process, some of it is wasted from the aeration basin or from the returned sludge line to the sludge – handling systems for treatment and disposal. Air is introduced into the aeration basin either by diffusers or by mechanical mixers.

❖ **Advantages of activated sludge process:**

The main advantage of activated sludge process is that it requires less space than the biological filter.

The second advantage is that a find effluent of high quality is produced such that it does not require high dilution for disposal.

❖ **Disadvantages of activated sludge process:**

There are two disadvantages , since the incoming effluent is introduced at one and of the tank, the BOD value will be higher at this end than the other. Moreover , the microorganisms at this end will be physiologically more active than those at the other end. Theses defects are rectified in the complete mixing activated sludge process.

Fig (4) Activated Sludge

❖ Methods of aeration:

Two major types of aeration systems are used in the activated sludge process. These are :

(1) Diffused aeration: air is supplied through porous diffusers or through air nozzles near the bottom of the tank. The air diffusers are of various types include the bubble diffuser, tubular diffuser, and jet diffuser.

(2) Mechanical aeration: in the mechanical aeration, the oxygen is entrained from the atmosphere. The aerators consist of submerged or partially submerged impellers that are attached to motors mounted on floats or on fixed structure.

Fig (5) Diffused Aeration (bubble diffuser)

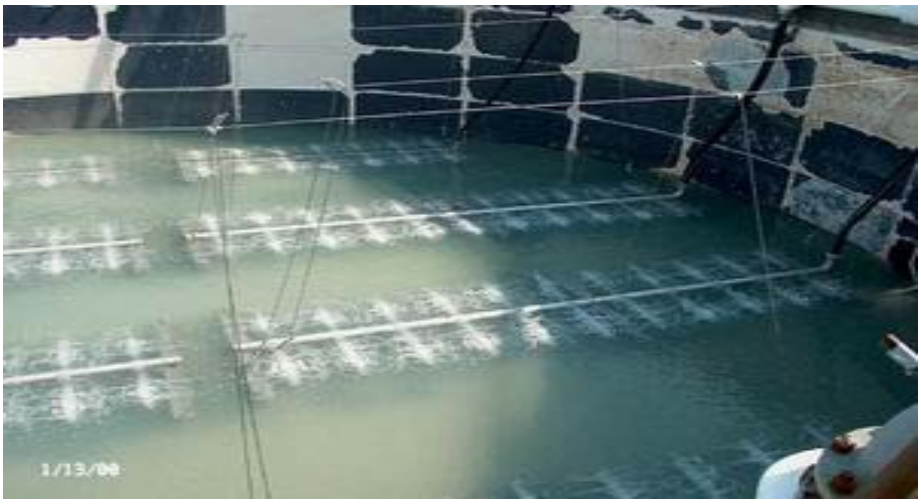

Fig (6) Diffused Aeration (tubular diffuser)

❖ 1-B- Aerated Lagoon :

The aerated lagoon are suspended growth reactors in earthen basins with no sludge recycle. Mechanical aerators are normally used for mixing and supplying oxygen demand. Since the aerated lagoon have a large detention period (2-6 days), a certain amount of nitrification is a achieved. Higher temperature and lower organic loadings generally encourage nitrification.

❖ **1-C- Stabilization Pond :**

A stabilization pond is a relatively shallow body of water contained in an earthen basin of certain shape, designed to treat wastewater. The ponds have become a popular means of wastewater treatment for small communities and industries that produce organic waste streams. The major disadvantages are large land area required, odor and insect problems, possible ground water contamination, and poor effluent quality.

❖ **2- A- Trickling Filter** :

The trickling filter consists of shallow bed filled with crushed stones or synthetic media. Wastewater is applied on the by means of a self propelled rotary distribution system. The organics are removed by the attached layer of microorganism (slim layer) that develop over the media. The under drain system collects the trickled liquid that also contains the biological solids detached from the media. The air circulates through the pores due to natural draft caused by thermal gradient. The trickled liquid and detached biological solids are settled in a clarifier. A portion of the flow is recycled to maintain a uniform hydraulic loading and to dilute the influent.

❖ **2- B - Rotating Biological Contactor:**

A rotating biological contactor (also called bio-disc process) consists of a series of circular plastic plates (discs) mounted over a shaft that rotates slowly. These discs remain approximately 40 percent immersed in a contoured bottom tank. The discs are spaced so that wastewater and air can enter space. The biological growth develops over the disc that receives alternating exposures to organics and the air. The excess growth of microorganisms becomes detached and therefore the effluent requires clarification.

Fig (7) Trickling Filter.

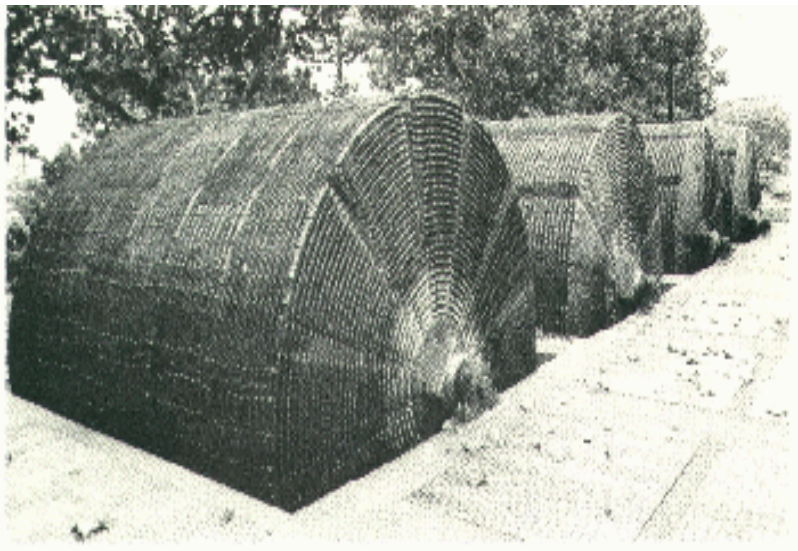

Fig (8) Rotating Biological Contactor.

Section Three Sludge Treatment

Sludge Treatment

:3-1: Introduction

The principal sources of sludge at municipal wastewater treatment plants are the primary sedimentation basin and the secondary deifiers.

Additional sludge may also come from chemical precipitation, nitrification denitrification facilities, screening and grinder , and filtration devices if the plant has these processes. Many times the sludge produced in these processes treatment systems so that the sludge is removal as either primary or secondary sludge. In some cases, secondary sludge is returned to the primary setting tank, ultimately giving a single stream consisting of combined sludge.

Sludge contains large volume of water . the small fraction solids in the sludge is highly offensive. Thus, the problem involved with handling and disposal of sludge are complex. Common sludge management processes include thickening, stabilization, dewatering , and disposal.

:3-2: Sludge Thickening :

Sludge contains large volume of water thickening of sludge is used to concentrate solids and reduce the volume. Thickened sludge requires less tank capacity and chemical dosage for stabilization and smaller piping and pumping equipment for transport .Common method of sludge thickening used at medium to large plants are (1) gravity thickening, (2) dissolved air floatation, and (3) centrifugation. Each of these method of thickening are discussed below.

:3-2-1: Gravity Thickening:

Gravity thickening is accomplished in circular sedimentation basins similar to those used for primary and secondary clarification of liquid waste. Solids coming to the thickener separate into three distinct zones. The top layer is the sedimentation zone, which usually contains a stream of diners sludge moving from the influent and tow are the thickening

zone.In the thickening zone the individual particles of the sludge agglomerate. A sludge blanket is maintained in this zone where the mass of sludge is compressed by material continuously added to the top.

Water is squeezed out of interstitial spaces and flows upward to the channels. Deep trusses or vertical pickets are provided to gently stir the sludge blanket and move the gases and liquid toward the surface. The supernatant from the sludge thickener passes over an effluent weir and is returned to the plant. The thickened sludge is withdrawn from the bottom Gravity thickening is used to concentrate solids in sludge from the primary clarifier, tickling filter, and activated sludge.

Fig (9) Gravity thickener

: 3-2-2 : Dissolved Air Flotation (DAF) :

Air flotation is primarily used to thicken the solids in chemical and waste activated sludge. Separation of solids is achieved by introducing fine air bubbles into the liquid. The bubbles attach to the particulate matter which then rise to the surface. In a dissolved air flotation system, the air is dissolved in the incoming sludge under a pressure of several atmospheres. The pressurized flow is atmosphere. Fine air bubbles rise that cause flotation of solids. The principal advantage of flotation over gravity thickening is the ability to remove rapidly and

completely those particles that settle slowly under gravity. The amount of thickening achieved is 2-8 times the incoming solids. Maximum concentration of solids in the float may reach 4-5 percent. Two radiations of the dissolved air flotation process include (1) pressurizing total or only a small portion of the incoming sludge and (2) pressurizing the recycled flow from the flotation thickener. The latter method is preferred because it eliminates the need for high- pressure sludge pumps, which are generally associate with maintenance problems.

Chemicals such as alum andiron salts and organic polymers are often added to aid the flotation process.

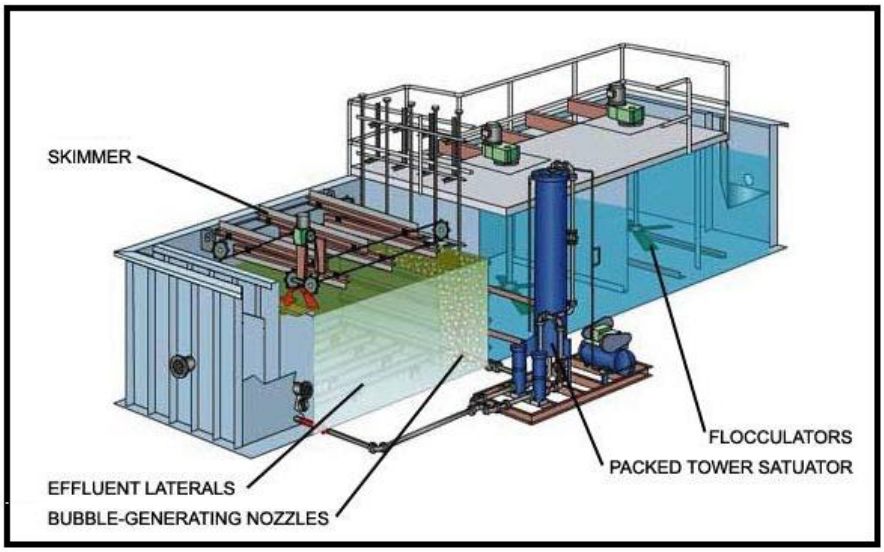

Fig (10) Dissolved Air Flotation (DAF)

: 3-2-3 : Centrifugation :

Centrifugations is a process by which solids are thickened or dewatered from the sludge under the influence of a centrifugal field many times the force of gravity. There are three basic types of centrifuges available for sludge thickening : (1) basket, (2) disc nozzle, and (3) solid bowl (or scroll – type decanter). The basket centrifuge operates on a batch basis.

The disc-nozzle, and centrifuge are continuous type but require extensive and careful prescreening and grit removal from the sludge.

The solid bowl centrifuges offer continuous operation and received widespread in sludge thickening. Centrifugal the thickening of sludge requires high power and high maintenance costs. Use should be limited to plants where space is limited, skilled operations is available. And sludge is difficult to thicken by other means.

:3-3: Sludge Stabilization:

The principal purposes of sludge stabilization are to reduce pathogens, eliminate offensive odors, and , and control the potential for purification of organic matter. Sludge stabilization can be a accomplished by biological, chemical , or physical means, selection of any method depends largely on the ultimate sludge disposal method. As an example, if the sludge is dewatered and incinerated, frequently no stabilization procedure is employed . On the other hand, if the sludge is applied on land, stabilization is necessary to control odors and pathogens .

Various methods of sludge stabilization are (1) anaerobic or aerobic digestion (Biological), (2)chemical oxidation or lime stabilization (chemical), and (3) thermal conditioning (physical).

In recent years, because of its inherent energy efficiency and normally low chemical requirements, anaerobic digestion process most widely selected municipal stabilization process at medium –and large-size municipal plants.

: 3-3-1: Anaerobic Digestion :

Anaerobic Digestion utilizes airtight tanks in which anaerobic microorganisms stabilization the organic matter producing method and carbon dioxide.

The digested sludge is stable, inoffensive, low in pathogen count, and suitable for soil conditioning.

Major difficulties with anaerobic digestion are high capita cost, vulnerability to operational upsets, and tendency to produce poor supernatant quality.

Anaerobic digestion involves a complex biochemical process in which several groups of facultative and anaerobic and anaerobic organisms simultaneously assimilate and break down organic matter. The process may be divided into two phases: acid and methane.

In acid phase facultative and anaerobic organisms simultaneously assimilate and break down organic matter. The process may be divided into two phases: acid and methane.

In acid phase facultative acid forming organisms convert the complex organic matter to organic acids (acetic, prop ionic, butyric, and other acids).

In this phase little change occurs in the total amount of organic maternal in the system, although some lowering PH results.

The methane phase involves conversion of volatile organic acids to methane and carbon dioxide.

The anaerobic process is essentially controlled by the methane-forming bacteria. Methane formers are very sensitive to PH, substrate

composition, and temperature if the PH drops below 6.0, methane formation essentially ceases, and more acids accumulates, thus bringing the digestion process to standstill, thus, PH and acid measurements constitute important Operational parameters .

❖ **Type of anaerobic digesters :**

The anaerobic digesters are of two types:

Standard rate and high rate , In the standard rate digestion process the digester contents are usually unheated and unmixed. The digestion period may vary from 30 to 60 day. In a high – rate digestion process, the digester contents are heated and completely mixed. The required detention period is 10 to 20 day.

Often a combination of standard – and high – rate digestion achieved by two-stage digestion. The second stage digester mainly separates the digested solids from the supernatant liquor:

Although additional digestion and g-s recovery may also be achieved.

Fig (11) Anaerobic digester

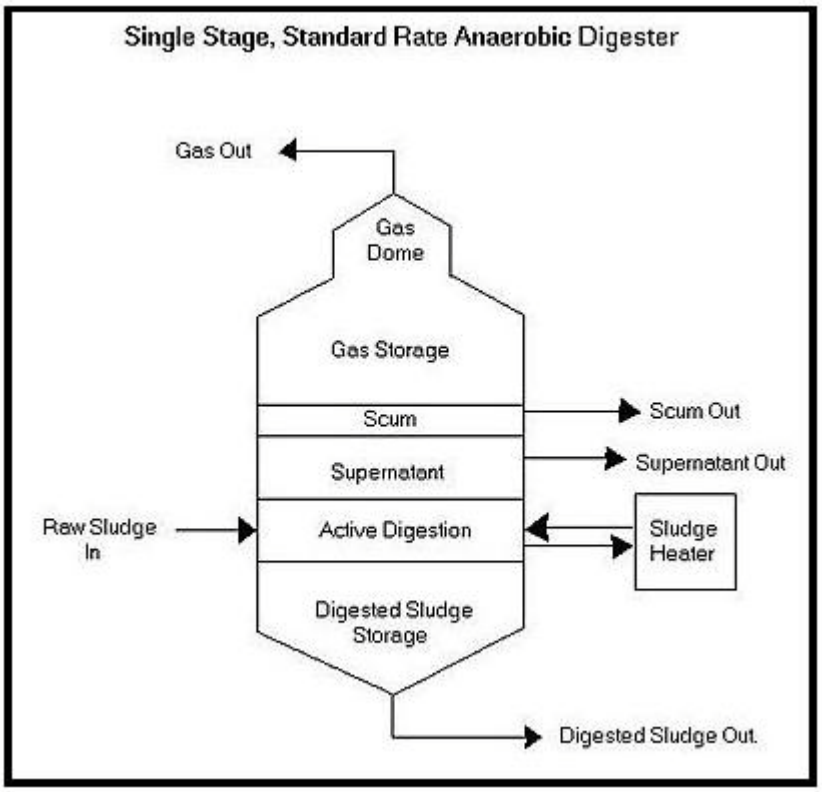

Fig (12) Standard Rate Anaerobic Digester

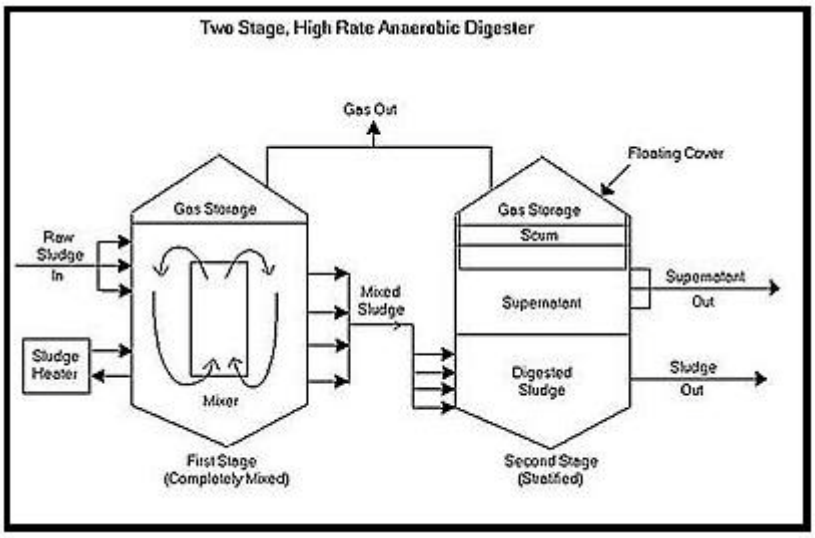

Fig (13) High Rate Anaerobic Digester

: 3-3-2 : Aerobic Digestion:

Aerobic sludge digestion is commonly used at small plants to stabilize the organic matter in the sludge. The process involves aeration of sludge for an extended period in open tanks. The process is similar to an activated sludge and involves the direct oxidation of biodegradable matter and oxidation of microbial cellular material (endogenous respiration) stabilization is not complete until there has been an extended period of primarily endogenous respiration (10-20 days).

The process has the following advantages:-

(1) it is simple to operate:
(2) it involves low capita cost.
(3) the digested sludge is odorless, biologically stable, and has excellent dewatering properties.
(4) the supernatant is low in BOD_5 .

The digested sludge is normally dewatered on sand drying beds. The disadvantage of aerobic digestion is high operating cost.

Fig (14) Aerobic Digester

❖ Other sludge stabilization processes:
(1) Chemical Oxidation.
(2) Lime stabilization.
(3) Heat treatment or thermal conditioning.

:3-4: Sludge Conditioning and Dewatering :

Sludge dewatering is necessary to remove moisture so that the sludge cake can be transported by truck and can be composted or disposed of by land filling or incineration. The solid particles in municipal sludge are extremely fine, are hydrated, and carry electrostatic charges.

These properties of sludge solids make dewatering quite difficult. Sludge conditioning is necessary to destabilize the suspension so that proper sludge- dewatering devices can be effectively used.

Sludge dewatering systems range from very simple devices to extremely complex mechanical processes. Simple process involves natural evaporation, and percolation from sludge lagoons or drying beds.

Complex mechanical systems utilize sludge conditioning following by centrifugation, vacuum filtration, filter pressers, and belt filter. The selection of any device depends on the quantity and type of sludge and the method of ultimate disposal.

:3-4-1: Sludge Conditioning :

Condition involves chemical and/or physical treatment of the sludge to enhance water removal. In addition, some conditioning processes also disinfect sludge, control odors, alter the nature of solids, provide limited solids destruction, and improve solids recovery.

:3-4-2: Sludge Dewatering :

A Number of sludge dewatering techniques are currently used. The selection of any sludge dewatering system depends on (1) characteristics of sludge to be dewatered, (2) space available, and (3) moisture content requirements of the sludge cake for ultimate disposal. When land is available and the sludge quantity is small, natural dewatering systems are most effective. These include drying beds and drying lagoons.

The mechanical dewatering systems are generally selected where land is not available. common mechanical sludge-dewatering systems include centrifuge, vacuum filter, filter press, and horizontal belt filter.

:3-4-3: Drying Beds :

Sludge drying are the oldest method of sludge dewatering. These are still used extensively in small- to medium – size plants to dewater digested sludge. Typical sand beds consist of a layer of coarse sand 15-25 cm in depth and supported on a graded gravel bed that incorporates selected files or perforated pipe under rains. Paved drying beds are also used. Each section of the bed (8m x 30m) contains water-tight walls, under drain system, and vehicle tracks for removal of sludge cake .

sludge is placed on the bed in 20-to 30 – cm (8 –to 12-in) layers and allowed to dry. The under drained liquid is returned to the plant. The drying period is 10-15 days and moisture content of

the cake is 60-70 percent. Poorly digested sludge may cause odor problems . depending on the climatic condition and odor control.

Requirements, the drying bed may be open or covered. The sludge cake from drying beds contains 20-40 percent solids, almost 90-100 percent solids capture occurs.

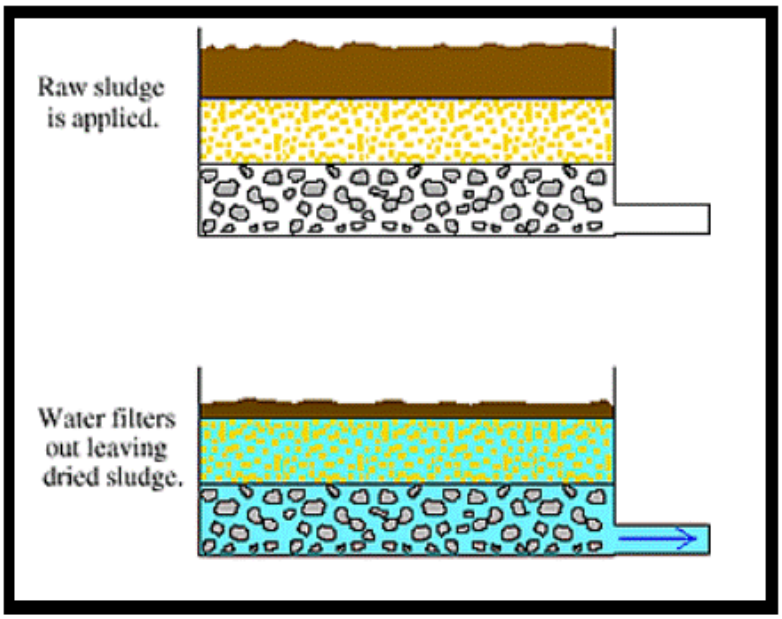

Fig (15) Drying Bed

Section Four
Calculations
& Results

Calculations & Results

:4-1: Introduction :

This project include designing of a wastewater treatment plant for a residential community with a population of (75000 person), and with a design period of (20 years).

- P_o = 75000 people
  t = 20 years
  k = 0.03 constant

- Assume the return amount of wastewater = 75%

- $P_t = P_o + Kt\ P_{20}$
  P_{20} = 75000 + 0.03 *20 * 75000
  P_{20} = 120000 person

- 620*0.75 = 465 ℓ/c.day

- Average flow = (465* 120000) / 1000
  = 55 800 m^3/day
  = 1.61 m^3/sec

- Calculate the ratio of the maximum sewage flow to the average (M)

$$M = 1 + \frac{14}{4+\sqrt{p}}$$

$$M = 1 + \frac{14}{4+\sqrt{120}} = 1.93$$

Say M = 2

- Max. flow = M * average flow

= 2 * 1.61 = 3.22 m^3/sec

:4- 2 : Design Calculations for Screen :

4- 2-1: Design Criteria Used:

a. Velocity through rack at max flow = 0.9m/sec
b. Bar spacing (clear) = 2.5cm
c. Provide two identical barracks, each capable of handling max flow Conditions and each equipped with mechanical cleaning device, $\theta = 75^{\circ}$
d. One screen champers could be taken out of service for routine maintenance without interrupting the normal planet operation.
e. Max. flow = 3.22 m^3/sec
Average flow = 1.61 m^3/sec

4-2-2 Design of Rack (Screen) Chamber :

- Assume that the depth of the flow in the rack chamber =1.18 m

- Clear area through = Qave. / Velocity through rack
The rack $= \frac{1.61}{0.9} = 1.7889 m^2$

- Clear width of the = Area / Depth of flow
opining at the
$= \frac{1.7889.}{1.18} = 1.5m$

- Assume the wide of each bar = 1cm
and the clear space = 2.5 cm

- No. of spacing $= \frac{1500mm}{25mm} = 60 space$

- Total no. of bars = 60 - 1 = 59 bar.

- Provide bars with 10 mm width

- Width of the chamber = 1.5 + (10* 60)/1000
= 2.1 m

❖ Calculate the efficiency = $\frac{25*60}{2100} = 0.71$

4-2-3 Head Loss Calculation:

The head loss through the bar rack is calculated from equation (1) and (2). Equation (1) is used to calculate head loss through clean screen only, while equation (2) is used to calculate head loss through clean or partly clogged bars.

❖ $h_L = \beta\left(\frac{W}{B}\right)^{4/3} hr \sin Q.....(1)$

❖ $h_L = \frac{V^2}{2g}(\frac{1}{0.7}).....(2)$

Where:

h_L = Head loss through the rack , m

Vv = Velocity through the rack and in the channel upstream of the rack ,

m /s (= 0.5 m/sec)

g = Acceleration due to gravity, 9.81 m/s^2

w = Maximum width of the bar= 10 mm

b = Minimum clear spacing of bars = 100 mm

h_r = Velocity head of the flow approaching the bars = $\frac{Vv^2}{2g}$.

θ = Angle of bars with horizontal.

ß = Bar shape factor = 2.42

❖ Case one : when the screen is clean :

$$h_L = \beta\left(\frac{w}{b}\right)^{4/3} * hrSinQ$$

$$h_L = 2.42*\left(\frac{10}{100}\right)^{4/3} *0.025*Sin75$$

$h_L = 0.0027m$

❖ Case two: when the screen is partly or completely clogged bars :

$$h_L = \frac{V^2 - Vv^2}{2g}\left(\frac{1}{0.7}\right)$$

$$h_L = \frac{0.9^2 - 0.5^2}{2*9.81} * \frac{1}{0.7}$$

$$h_L = 0.05m$$

: 4-3 : Design Calculations for The Aerated Grit Chambers :

4-3-1 Geometry of Grit Chamber

❖ provide three identical grit chambers for independent operation.

❖ Maximum design flow through each chamber
= (3.22m$^{3/}$sec)/3
= 1.07334 m3/sec

❖ Volume of each chamber for 4-min detention period
= 1.07334 m^3/s * 4 min * 60 sec/min
= 257.6 m^3

❖ Provide average water depth at mid width
= 3.65 m

❖ provide freeboard
= 0.8 m

❖ Total depth of grit chamber
= 4.45 m

❖ Surface area of chamber
= 257.6 m^3 /3.65m
= 73.6 m^2

❖ provide length to width ratio
= 4:1 $\Rightarrow$ area = 4w^2

❖ Width of the chamber

= 4.28 m

❖ Length of the chamber

= 17.15 m

4-3-2 Select Diffuser Arrangement:

Locate diffusers along the length of the chamber on one side and place them 0.6 m above the bottom. The up ward draft of the air will create a spiral roll action of the liquid in the chamber. The chamber bottom is sloped toward a collection channel located on the same side as the air diffusers. A screw conveyor is provided to move the girt along the channel length to a hopper at the downstream end.

4-3-3 Design the Air Supply System:

❖ Provide air supply at a rate of 7.8 ℓ/s per meter length of the chamber.

❖ Theoretical air required per chamber.

= 7.8 ℓ /s.m * 17.15 m

= 133.77 ℓ/s

❖ Provide 150 percent capacity for peaking purpose.

Total capacity of the diffusers

= 1.5* 133.77

= 152.1 ℓ/s per chamber.

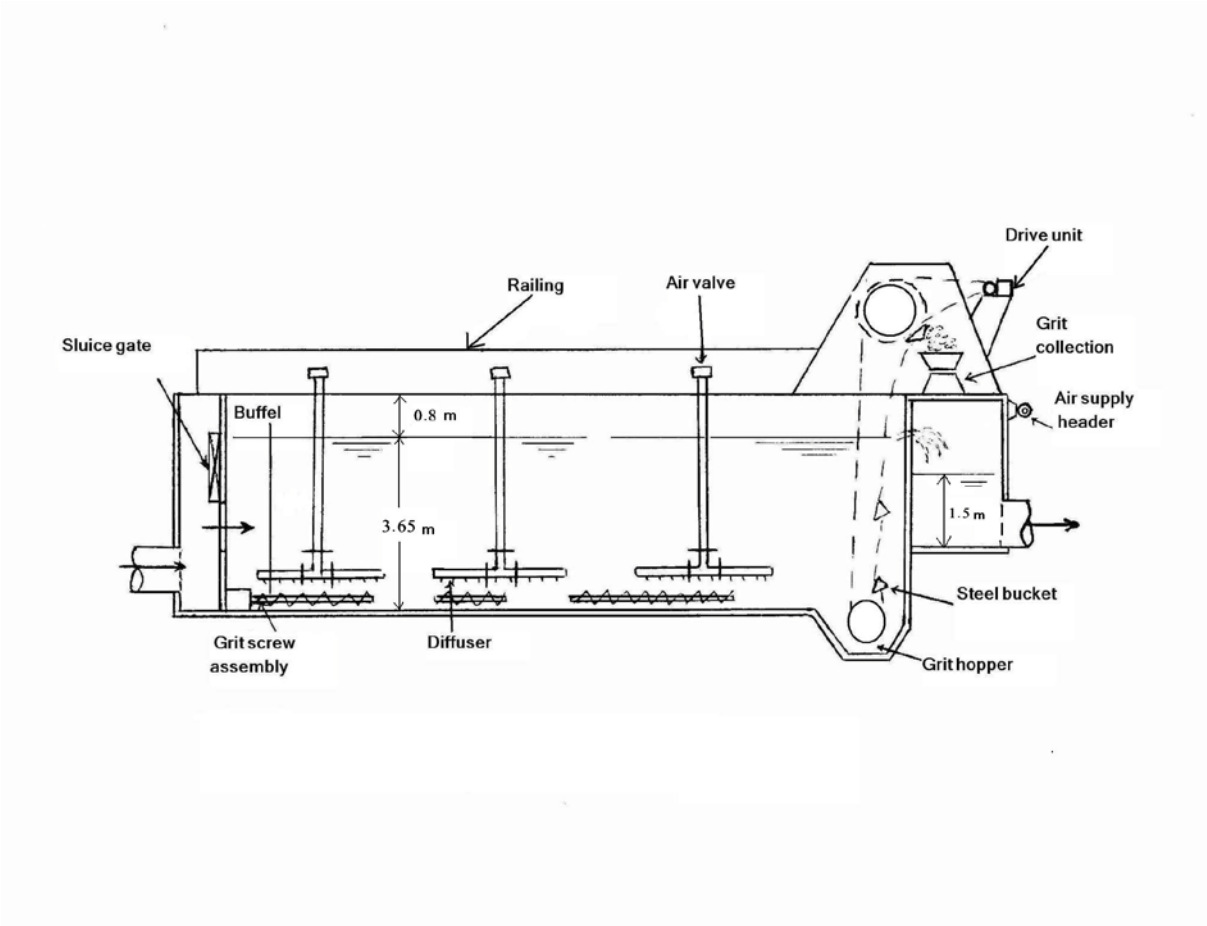

Fig (16) Design Details of the Aerated Grit Chamber

: 4-4: Design Calculations for Primary Sedimentation Tanks:

4-4-1 Design Critter Used:

a.Six rectangular units shall be designed for independent operation .A bypass to the aeration basin shall be provide for emergency conditions when one unit is out of service .Most regulatory agencies will allow such bypass.

b. Overflow rate and detention time shall be based on an average design flow of 1.61 m^3/sec

c. The overflow rate shall be less than 36 m^3 /m^2. day (at average design flow).

d. The detention time shall be not less than 1.5 h.

e. All side streams shall be returned to aeration tanks.

f. The weir loading shall be less than 186 m^3/m.d at average flow.

g. The liquid depth in the basin shall be no less than 2m.

h. In flute BOD_5, and TSS, to the plant = 250 mg/ℓ, 260 mg/ℓ respectively.

4-4-2 Design Calculations:

A- Basin Geometry:

❖ Average design flow through each basin

= 1.61/6

= 0.26 m^3/sec

❖ Overflow rate at average flow

= 36 m^3/m^2.day

❖ Surface area = $\frac{0.26m^3/\sec * 86400\sec/day}{36m^3/m^2.day}$

= 624 m^2

❖ Use length to width ratio (4:1)

→ $A = 4W^2$

❖ Wide of each basin

= 12.5m

❖ Length of each basin

= 4*12.5

= 50 m

❖ Provide average water depth at mid. length of the tank.

= 3.1 m

❖ Provide Freeboard

= 0.6m

❖ Average depth of the basin

= 3.1+0.6

= 3.7 m

B- Check Overflow Rate:

❖ Overflow rate at = $\frac{0.26m^3/s * 86400\sec/day}{12.5*50}$

❖ Average design flow

= 35.94 m^3/m^2.d

❖ Overage rate at max. design flow $= \dfrac{0.536m^3/\sec * 86400\sec/day}{12.5*50}$

$= 74\ m^3/m^2.d$

C- Detention Time:

❖ Average volume of the basin

$= 3.1*\ 12.5*50$

$= 1937.5m^3$

❖ Detention time of $= \dfrac{1937.5m^2}{0.26m^3/\sec * 3600s/h}$

❖ Average design flow $= 2.069$

$= 2.07$ hr

❖ Detention time at max design flow $= \dfrac{1937.5m^3}{0.536m^3/\sec * 3600s/h}$

$= 1$ hr

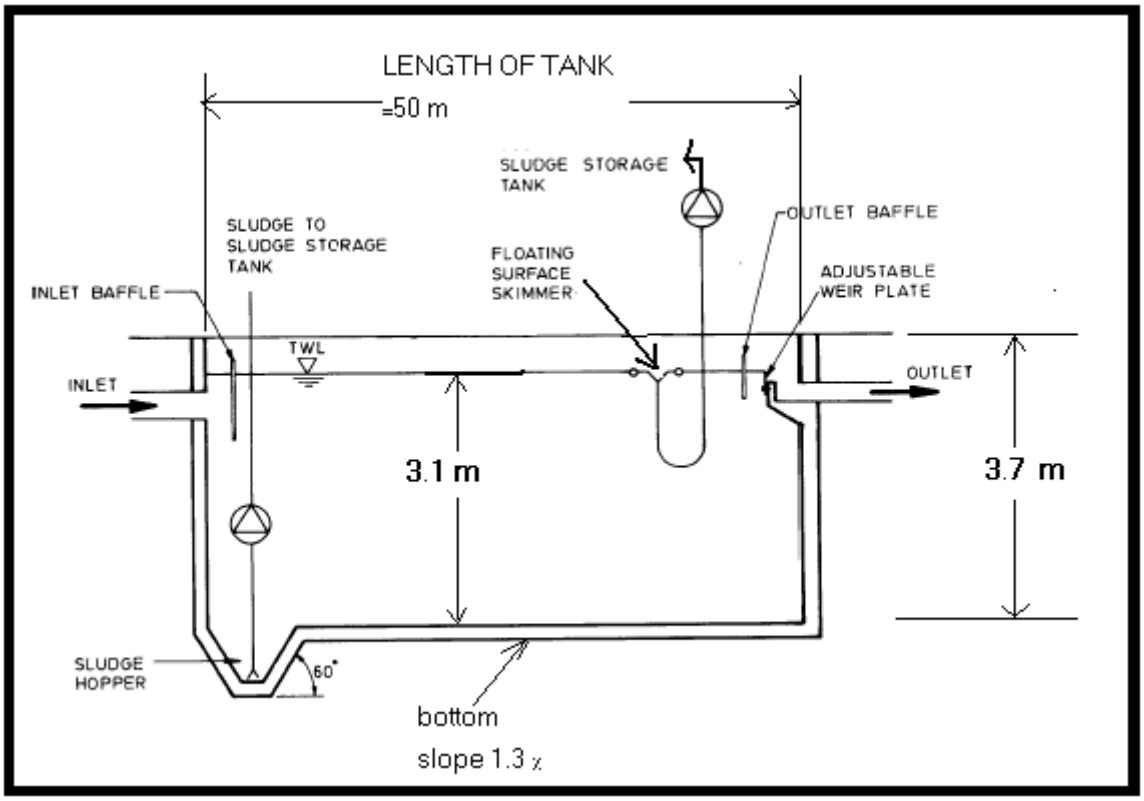

Fig (17) Design Details of The Primary Sedimentation Tank

: 4-5: Design Calculations for the Biological Reactor:

4-5- 1- Biological kinetic Equations Used:

$$V = \frac{Q_2 QY(S\circ - S)}{X(1 + kdQc)} \text{.....(1)}$$

$$\frac{\Delta x}{\Delta t} = \frac{xV}{Qc} \text{.....(2)}$$

$Q_r \cdot X_r = (Q + Q_r)\, x$ ..... (3)

Q_2 demand = 1.47 (So – S) Q - 1.4 X_r (Q_w) ..... (4)

Where:

V = Volume of aeration basin, m^3

Qc = Mean cell residence time based on solids in the aeration basin , day

Q = Influent wastewater flow rate, m^3/d

Y = Yield coefficient over finite period of log growth, g/g

So = Influent soluble BOD_5 concentration mg/ℓ

S = Effluent soluble BOD_5 concentration mg/ℓ

X = Concentration of MLVSS maintained in the aeration basin mg/ℓ (g/m^3)

Kd = Endogenous decay coefficient, d^{-1}

$\frac{\Delta x}{\Delta t}$ = Growth of biological sludge over time period Δt, mg/ℓ (g/m^3)

Q_r = Waste sludge flow rate from the sludge return line, m^3/d

Xr = Concentration of sludge in the return sludge line, mg/ℓ (g/m^3)

Qw =Waste sludge flow rate from aeration tank, m^3/d

4-5-2 Design Criteria Used:

1. Provide complete mix activated sludge process using diffused aeration system.
2. The effluent shall have BOD_5 and TSS of 20 mg/ℓ or less.
3. Provide eight aeration basins with common wall.
Each unit may be removed from operation for repairs and maintenance while other units shall continue to operate under normal operating procedures.
4. The biological kinetic coefficients and operational parameters for the design purpose shall be determined from carefully controlled laboratory Studies. The following kinetic coefficients and design parameters shall be used .

- Qc = 10 d
  Y = 0.5 mg/mg
  X = MLVSS = 3000 mg/ℓ
  Kd = 0.06 d^{-1}

- Ratio of MLVSS/MLSS = 0.8
- Return sludge concentration (Xr) = 15000 mg/ℓ (TSS)
- BOD_5 for the effluent (SS) = 0.63
- Influent BOD_5 and TSS = 200 and 150 (mg/ℓ) respectively.
- Average flow = 1.61 m^3/s = 139104 m^3/day.

4-5-3 -Design Calculations for the Aeration Basins:

A. Dimensions of aeration basin and sludge growth.

1- The concentration of soluble BOD_5 in the effluent:

BOD_5 exerted by the	= 20 mg/ℓ * 0.63
Solids in the effluent	= 12.6 mg/ℓ
Soluble portion of the BOD_5 in the effluent	= 20 mg/ℓ - 12.6 mg/ℓ
	= 7.4 mg/ℓ (g/m^3)

2 - Treatment efficiency of biological treatment:

eff. = ((200 mg/ℓ - 7.4 mg/ℓ) /200 mg/ℓ) * 100
eff. = 96 percent

3 - Calculate the reactor volume:

$$V = \frac{QQ_cY(S_O - S)}{X(1+kdQ_c)} =$$

$$V = \frac{139104m^3/d * 10d * 0.5(200-7.4)g/m^3}{3000g/m^3 * (1+0.06d^{-1} * 10d)}$$

$$V = \frac{133957152}{4800} = 27907.74m^3$$

4 - Dimensions of aeration basin:

❖ Provide eight rectangular aeration basins with common walls.

❖ Water depth = 4.5 m

❖ Volume for each basin $= \frac{2790774}{8}$
= 3488.48 m^3

❖ Surface area for each basin $= \frac{3488.48}{4.5}$

❖ Provide length to width ratio = 2:1

$$\therefore A = 2W2$$

❖ Provide width for each basin $= \left(\frac{77.21}{2}\right)^{1/2}$
= 20 m

❖ Provide length for each basin = 2 x 20
= 40 m

❖ Provide freeboard = 0.8 m

❖ Total depth for each basin = 4.5+0.8
= 5.3 m

B. Calculations for the detention time:

Detention time = volume /Q

$$= \frac{27907.74 * 24}{139104} = 4.815 hr$$

C. Calculations of Qw and Qr :

❖ Calculate the growth of biological sludge over time period:

$\Delta x/\Delta t$ = XV/Qc = (3000 mg/ℓ * 27907.74 m^3 * 1000 mg/ℓ) / (10*1000000 mg/ m^3)

= 8372.322 kg/day

❖ Assume (SS) contain 80 percent volatile matter

$$\therefore \frac{8372.322}{0.8} = 10465.4 kg/day$$

❖ Qw = (10465.4 *10 mg/day) / (15000 mg/ℓ *10 ℓ/m^3)

❖ Qw = 697.7 m^3/day (for all basins)

❖ Qw = for each basin = $\frac{697.9}{8}$

= 87.2 m^3 day.

❖ Qr will be calculated from eq. (3)

Qr . Xr = (Q + Qr) x

$$Qr = \frac{X.Q}{(Xr - X)} = \frac{3000 * 139104}{(15000 - 3000)}$$

Qr = 34776 m^3/day (for all basins)

Qr for each basin = $\frac{34776}{8}$

= 4347 m^3/day

❖ $\frac{Qr}{Q} = \frac{34776}{139104} = 0.25 \Rightarrow OK$

D. Calculations of Oxygen Requirements :

❖ Average flow for each basin = $\frac{139104}{8}$

= 173388 $\frac{m^3}{day}$

❖ Qw for each basin = $\frac{697.7}{8} = 87.2125 m^3/d$

❖ O_2 demand = 1.47 (S_o - S) Q - 1.14 Xr (Qw)
O_2 demand = 1.47 (200 -7.4) * 17388 * 1000
- 114 * 15000 * 87.2125 * 1000
= $3.4*10^9$ mg/d
= 3431.6 kg/d (for each basin).

❖ Compute the volume of air required :
Assuming that air weights 1.2 kg/m^3 and contains 23.2 percent oxygen weight.

Theoretical air

Required under = $\frac{3431.9}{0.232 gQ2/air * 1.2 kg/m^3}$

Filed condition

= 12327.2 m^3/d

Assume that the = 7 percent
Efficiency of air
Diffusers

Theoretical air $= \frac{12327.2m^3}{0.07} = 176102.85$

= 176102.85 m^3/d

= 122.3 m^3/min per basin

Provide design air at 150 percent of the theoretical air

Total design air = 176102.85*1.5

= 264154.275 m^3 /d

= 183.44 m^3/min per basin.

: 4-6 : Design Calculations for the Secondary Clarifiers :

4-6-1 Design Criteria Used:

1-Provide eight circular clarifiers, each clarifier Shall have independent operation with respect to the aeration basins.

2-Design the clarifiers for average design flow plus the recirculation.

3-The overflow rates at average and peak flow conditions shall not exceed 15 and 40 m^3/m^2 .d , respectively.

4-6-2 Design Calculations :

A- Surface Area of secondary clarifier.

❖ Design flow to the secondary clarifier

= Qav. + Qr – Qw

= 1.61 m^3/s + 0.4025 m^3/s + 0.008

= 2.007 m^3/sec

❖ Design flow for each secondary clarifier

= 1/8 * 2.007 m^3/s

= 0.25 m^3/sec

❖ Assume SOR = 15 m/day

❖ Area = Q⁄SOR

❖ Area $= \dfrac{0.25m^3/s * 86400 \sec/day}{15m/day}$

$=1440\ m^2$

❖ Diameter of the secondary clarifier

$= \sqrt{\dfrac{1440*4}{\Pi}}$

$=42.8$ m

❖ Provide eight clarifier each of (42.8m) diameter.

❖ Actual Area $= \dfrac{\lambda}{4}(42.8)^2$

$= 1438.72m^2$

❖ Check the overflow rate at average design flow.

The overflow rate = Q / Area

$= \dfrac{0.25m^3/s * 86400 \sec/day}{1438.72m^2}$

$= 15.01 \Rightarrow \therefore ok$

❖ Check the overflow rate at peak design flow

❖ At peak design flow plus recirculation the flow to each clarifier

$= \dfrac{3.22m^3/s + 0.425m^3/s}{8}$

$= 0.452\ m^3/s$

Overflow $= \dfrac{0.452m^3/s * 86400 s/d}{1438.72m^2}$

$= 27.144\ m^3/m^2.d$ (Satisfactory).

❖ At peak design flow plus recirculation when seven clarifiers are in operation, the flow to each clarifier

$$= \frac{3.22m^3/s + 0.4025m^3/s}{7}$$

$= 0.5175\ m^3/s$

❖ Overflow rate when seven clarifiers are in operation.

$$= \frac{0.5175m^2/s * 86400s/d}{1438.72m^2}$$

$= 31.07\ m^3/m^2.d$

(this is sati's factory being less than the design criteria of 40 $m^3/m^2.d$).

B. Depth of secondary clarifier :

❖ Provide average side water depth

= 3.5 m

❖ For additional safety provide a free board

= 0.5 m

❖ Total depth of clarifier

= 3.5+0.5

= 4 m

C. Detention time

❖ Calculate the volume of the clarifier

Average volume of the clarifier

$$= \frac{\Pi}{4} * (42.8)^2 m * 3.5m$$

$= 5035.5\ m^3$

❖ Calculate Detention time under different flow conditions.

❖ Detention time under average design flow plus recirculation

$$= \frac{5035.5m^3}{0.25m^3/\sec * 3600s/hr}$$

= 5.6 hr

❖ Detention at peak design flow plus recirculation

$$= \frac{5035.5m^3}{0.452m^3/s * 3600s/hr}$$

= 3.01 hr

❖ Detention time under emergency condition (peak design flow plus recirculation when one clarifier is out of service)

$$= \frac{5035.5m^3}{0.5175m^3/s * 3600s/hr}$$

= 2.7 hr

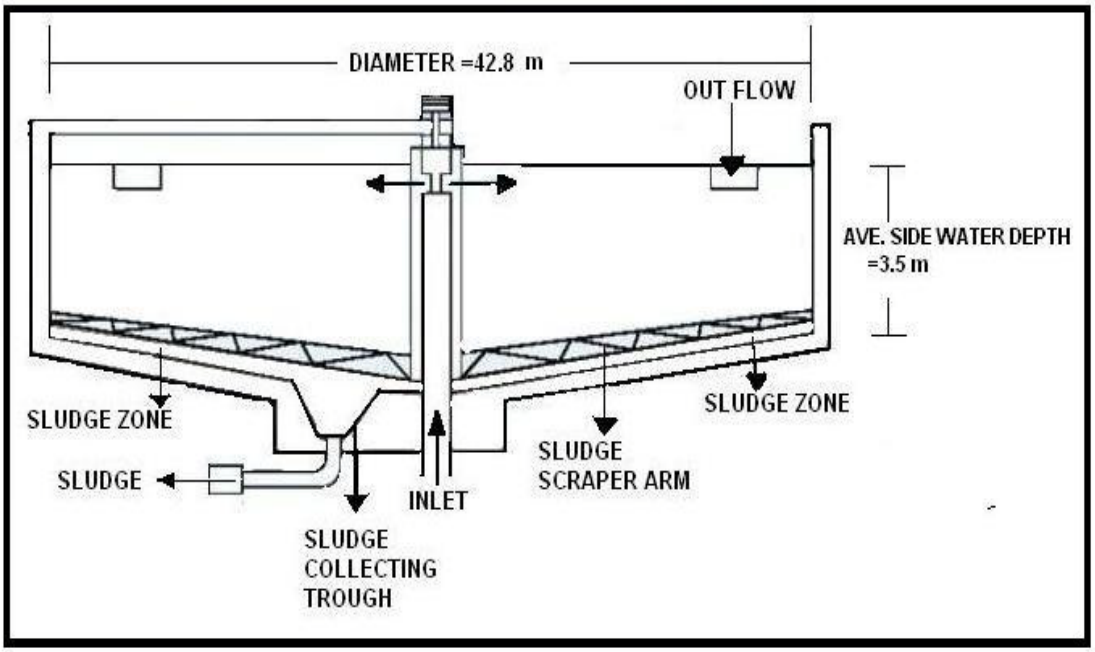

Fig (18) Design Details of The Secondary Clarifier

:4-7 : Sludge Calculation :

Calculate the amount and the volume of the sludge produced from the primary sedimentation tanks and from the aeration tanks.

:4-7-1: Sludge produced from primary sedimentation

❖ Specific gravity of sludge = 1.03 $\frac{g}{cm^3}$

Typical solids content = 4.5 percent

❖ Compute average quantity of sludge produced per day:

Amount of solids produced per basin per day at a removal rate of 63 percent

= 260g/m^3* 0.36*0.26m^3/s*86400s/d* kg/1000g

= 3679.6 kg/d

Average quantity of sludge produced per day from the eight basins

= 8 *3679.6

= 29436.8kg

❖ Compute the volume of sludge produced per day

Volume of sludge at specific gravity of 1.03 and 4.5 percent solids

$$= \frac{29436.8 kg/d}{1.03 g/cm^3 * \frac{1}{1000 g/kg} * 0.045 * (100 cm)^3/m^3}$$

= 635m^3/d

:4-7-2: Sludge produced from aeration basins :

❖ Use the following equations to calculate the quantity of sludge :

$$Yobs.= \frac{Y}{(1+kd/Q2)} \text{.....(1)}$$

$$Px = Yobs\ Q\ (S_o - S) \quad \text{……..(2)}$$

Where :

Yobs = Observed yield , g/g = 0.35

Px = Waste activated sludge , kg/d

❖ Compute the of sludge produced per day

❖ Volume of sludge at specific gravity of 1.03 and 4.5 percent solids

$$= \frac{8372.322 kg/d}{1.03 g/cm^3 * \frac{1}{1000 g/kg} * 0.045 * (100 cm)^3 m^3}$$

$= 180.632\ m^3/d$

:4-7-3: Total quantity and volume of sludge :

❖ Total sludge quantity

= 29436.8kg/d+8372.322kg/d

= 37809.122 kg/d

❖ Total volume of sludge

= 635 m^3/d + 180.632 m^3/d

= 815.632 m^3/d

:4-8: Design Calculations for Gravity Thickener :

- Assume the drying ratio = 5 percent
- Thickener = $\dfrac{37809.122}{1.03g/cm^3 * \dfrac{1}{1000g/kg} * \dfrac{(100cm)^3}{m^3} * 0.05}$
- Provide 6 gravity thickeners for thickening of combined primary and waste activated sludge.
- Volume for each thickener

$$= \frac{734.15}{6} = 122.3m^3/d$$

:4-9: Design Calculations for Drying Beds:

- Assume the depth of sludge over drying bed
  = 0.25
- Total volume of sludge
  = 815.632m^3/day
- Surface area

$$= \frac{815.632m^3/d}{0.25m} = 326.53m^2/day$$

- Provide seven drying beds

- Surface area for each bed

$$= \frac{3262.53m^2}{7} = 466m^2/d$$

- Assume length of each bed = 30 m

- The width of each bed

$$= \frac{466m^2/d}{30m} = 15.5m$$

- Actual area for one bed
  = 30 * 15.5 = 465 m^2/d
- Area need per week
  = 7*465=3255m^2

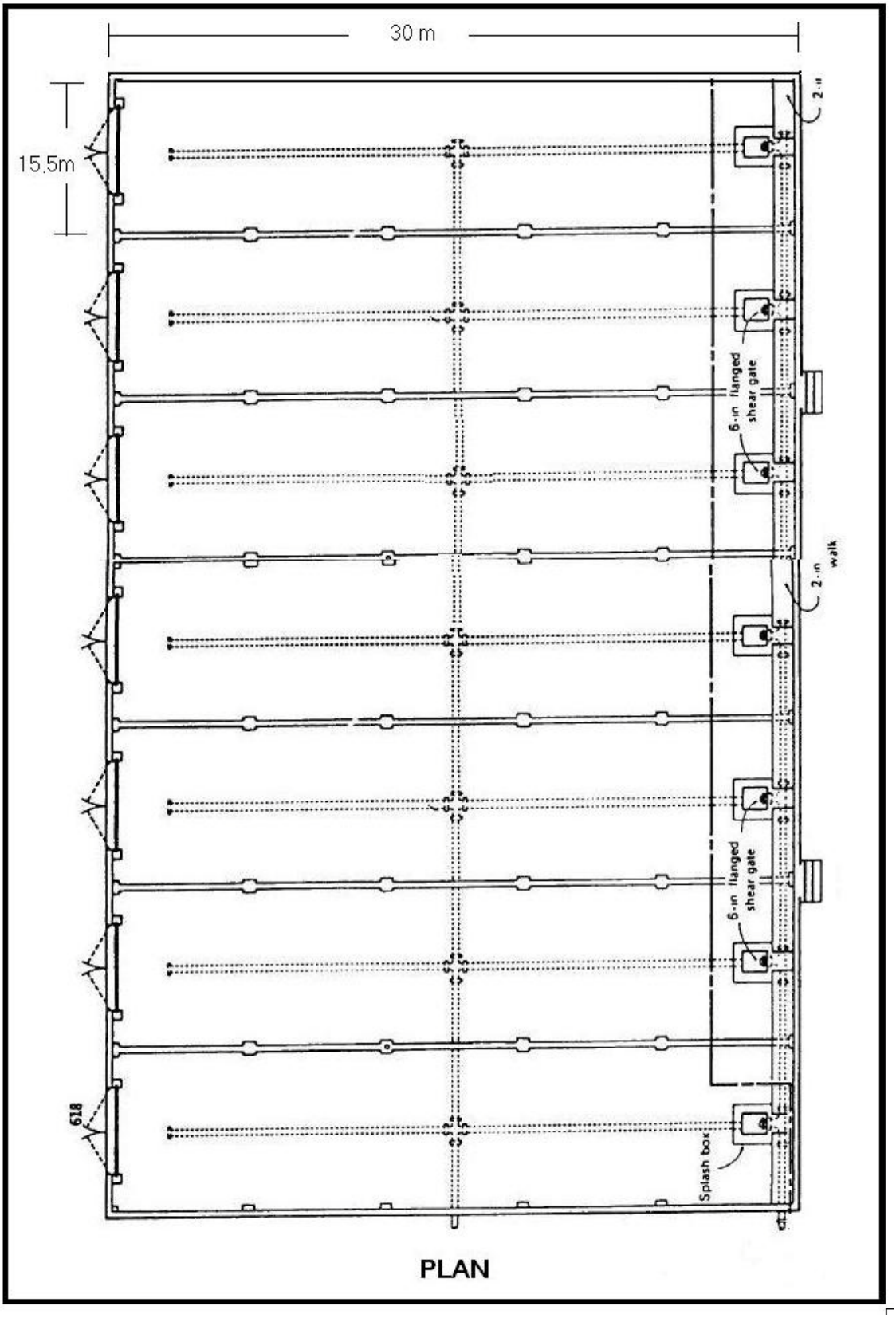

Fig (19) Design Details of Drying Beds

Discussion and Conclusions :

1- Design of wastewater treatment plant (WWTP), is highly effected by the population density , population growth and period of broadcasting.

2- Design parameters should be carefully considered for each part of the (WWTP) .

3-In this project the population density used was "75 000" capita ,which resulted in large and added basins were used.

4- In addition to physical , chemical , and biological treatment processes , there is an advanced treatment used to remove those constituents , that are not adequately removed by the previous methods of treatment , and the produced water can be used for cooling and for several industries .

5- Disinfection unit could also be added to this designed project to get higher water quality.

References :

1- Syed R. Qasim "*Waste water treatment plant Planning , Design , and Operation* ", 1985 .

2- Steel , E.W. & T.J. McGhee " *Water Supply and Sewerage*" Fifth Edition , McGraw _ Hill Book Co. New York ,1979 .

3- Benefield , L.D. , And C.W. Randall , "*Biological Process Design Of Waste Water Treatment"*, Prentice - Hall , Englewood Cliffs , N.J. 1980.