Loads and Load Analysis

- Structures must be proportioned so that they will not FAIL or DEFORM EXCESSIVELY under loads,
- The designer must decide which loads to apply based on the type of structures (Shape and Function).

Dead Loads:

- These are the loads associated with the WEIGHT of the structure and its PERMANENT COMPONENTS (floors, ceilings, ducts etc.)
- We assign to the members a dimension to evaluate the dead loads, this value needs to be checked AFTER the final dimensioning.

Loads and Load Analysis
Distribution of Dead Loads to *Framed Floor Systems*

- Many floor systems consist of reinforced concrete slab supported on a grid of beams,
- We need to understand how to transfer the load from the slab to the beams,

- **For Case 1:**
  - It is a square floor system,
  - The edge beams support the same triangular load,
  - The area of the slab portion that is supported by a particular beam is called the **TRIBUTARY AREA**.
- **Side Note:**
  - Total force of the slab is $w*L^2$ where w is the load per unit area (kN/m^2),
  - ¼ of that total load is $w*L^2/4$,
  - This total force has to be in triangular shape, therefore the height of the load can be calculated as follows

$w*L^2/4 = ½ * height * L$, $height = wL/2$

And from here reaction forces can be calculated…

Case 1:

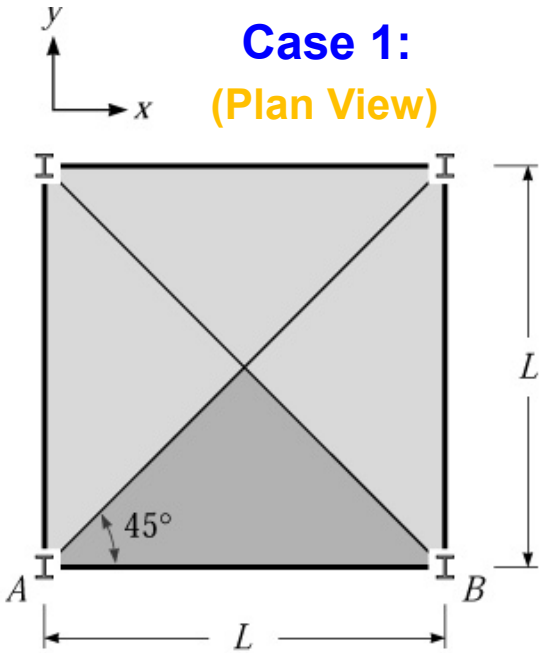

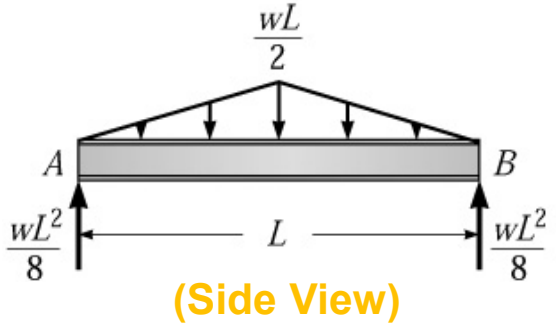

Loads and Load Analysis
Distribution of Dead Loads to *Framed Floor Systems*

- **For Case 2:**
  - It is a rectangular floor system,
  - The rectangular slab is supported by two parallel beams,
  - The tributary area is $(L_s/2) * L_b$ (shaded grey area)
  - Along the beam B1, the magnitude of the distributed load will be

    dist. load = $w*L_s/2$ [kN/m]

    where w is the load per unit area (kN/m^2).
  - What would be the reaction forces for the beam B1?
- **Side Note:**
  - What would be the distributed load on a 1 m width slab beam Figure (c)?
  - The total force on a 1 m width slab beam is

    $w*(1)*L_s = w*Ls$ [kN]

    Therefore distributed force would be

    $w*Ls / Ls = w$ [kN/m] (Figure c)
  - What would the reaction forces be equal to?

Case 2: (Plan View)

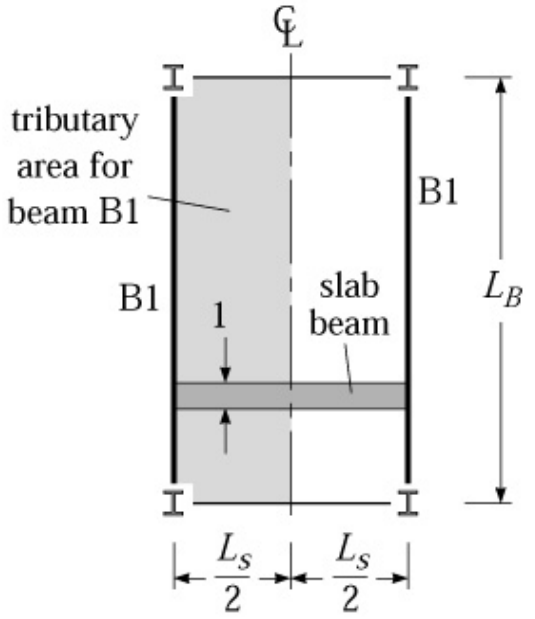

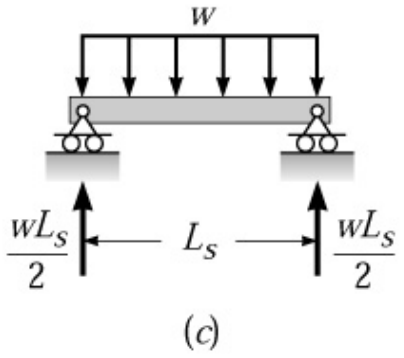

Loads and Load Analysis
Distribution of Dead Loads to Framed Floor Systems

Case 3: (Plan View)

- For Case 3:
  - A slab carrying a uniformly distributed load of w, and is supported on a rectangular grid of beams (Figure d)
  - Figures show the "assumed" and "simplified" distributed forces acting on the beam B2.

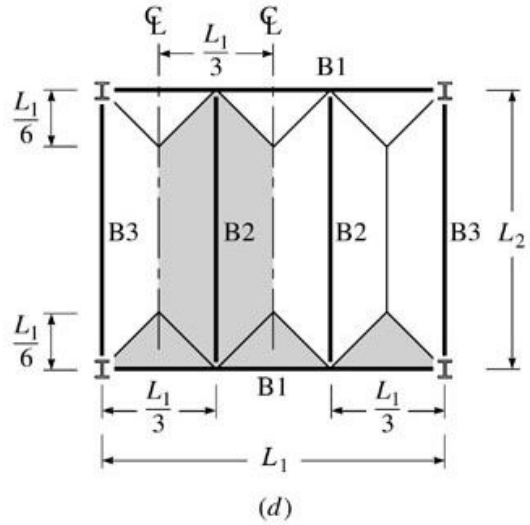

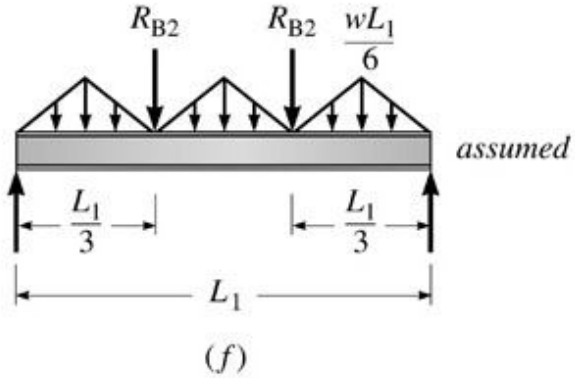

- Figures (f) and (g) show the forces acting on the beam B1,
- Notice that there are distributed as well as concentrated forces.

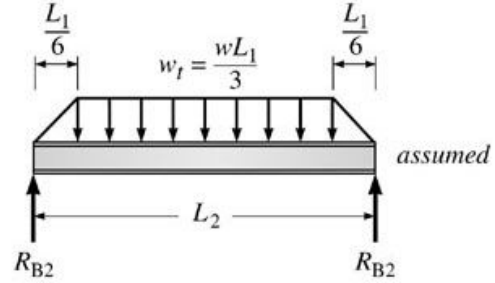

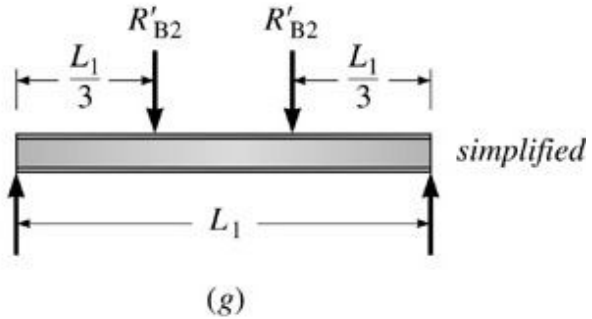

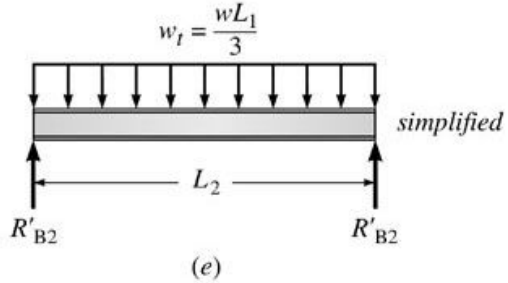

Loads and Load Analysis
Distribution of Dead Loads to Framed Floor Systems

- Example:
  - The floor shown below is 12 cm thick reinforced concrete slab of unit weight 25 kN/m^3 supported by STEEL BEAMS (see Figure a)
  - The beams are connected by CLIP ANGLES (pin support) (see Figure c)
  - An acoustical board ceiling of unit weight 0.07 kN/m^2 is suspended from the concrete slab,
  - An additional dead load of 0.95 kN/m^2 is considered to take into account duct, piping, conduits,
  - The self-weight of beam B1 is 0.04 kN/m and for the beam B2 is 0.067 kN/m
  - Find the magnitude of the dead load distribution on beam B1 and B2.

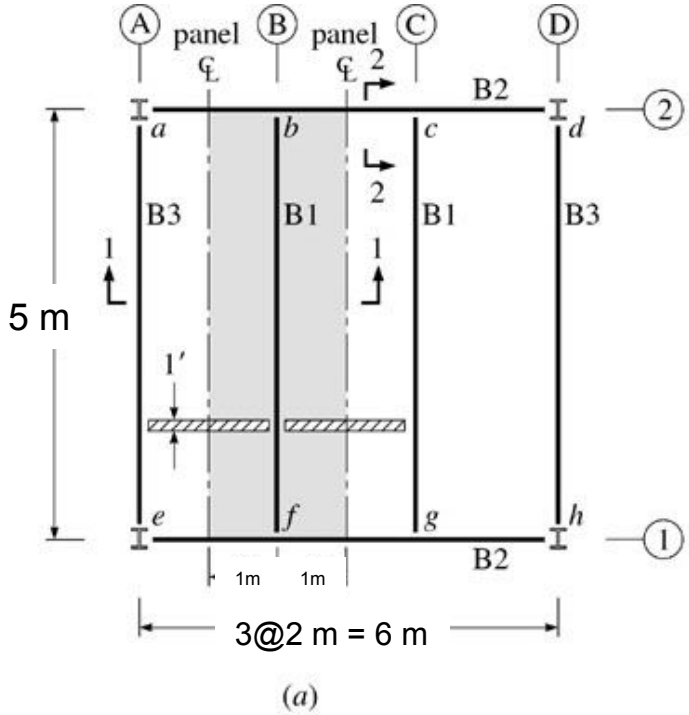

(a)

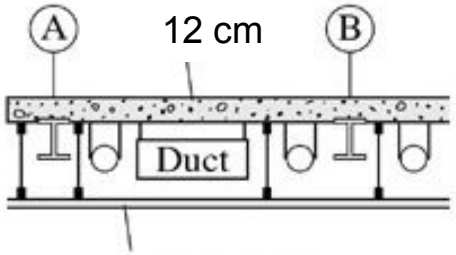

Section 1-1

(b)

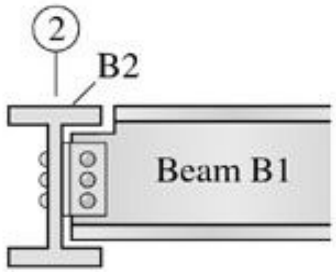

Section 2-2

(c)

Loads and Load Analysis
Distribution of Dead Loads to Framed Floor Systems

- Example:
  - For B1:
    - Weight of the slab: (1 m + 1 m) * (0.12 m) * (25 kN/m^3) = 6 kN/m
    - Weight of the ceiling: (1 m + 1 m) * 0.07 kN/m^2 = 0.14 kN/m
    - Weight of the additional nonstructural elements: (1 m + 1 m) * 0.95 kN/m^2 = 1.9 kN/m
    - Weight of the beam itself: 0.04 kN/m
    - Total weight per unit length: 6 + 0.14 + 1.9 + 0.04 = ~8.1 kN/m (rounded up)

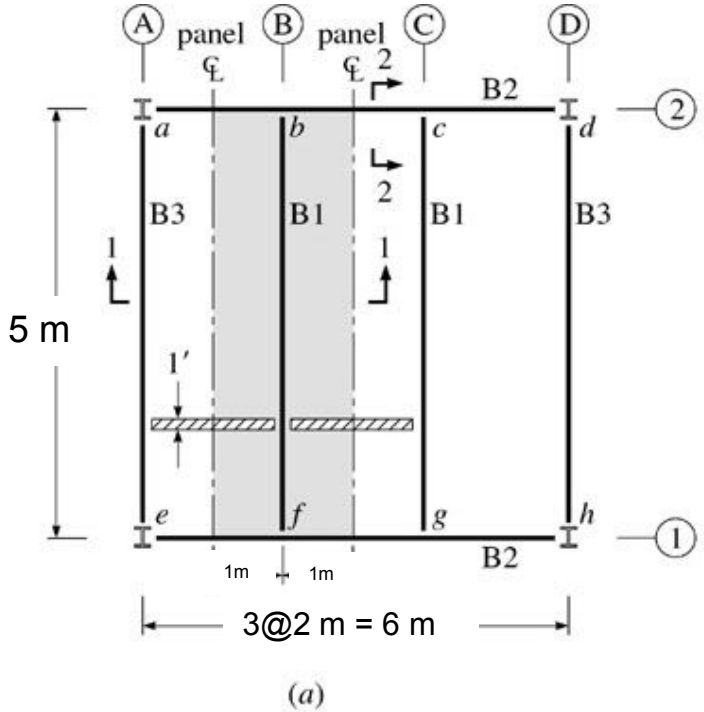

(a)

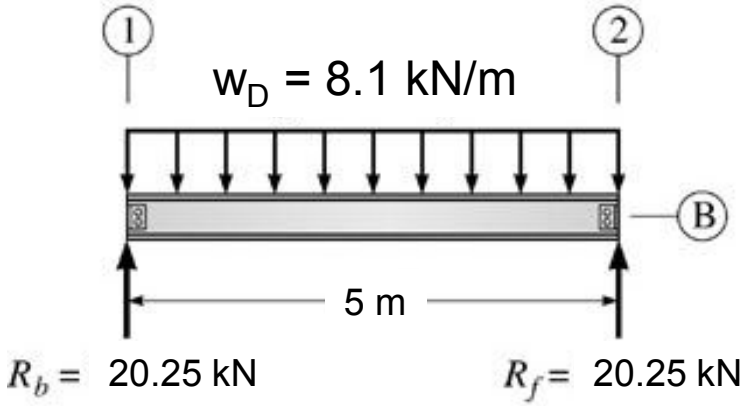

Beam B1

(e)

Loads and Load Analysis
Distribution of Dead Loads to Framed Floor Systems

- Example:
  - For B2:
    - Notice that the slab load is carried by the B1 beam ONLY (due to the rectangular shape of the slab and a simplified assumption),
    - Therefore B2 only carries its own weight: 0.067 kN/m
    - As well as the concentrated reaction forces due to B1 applied at the third points of girder B2 (see figure f)

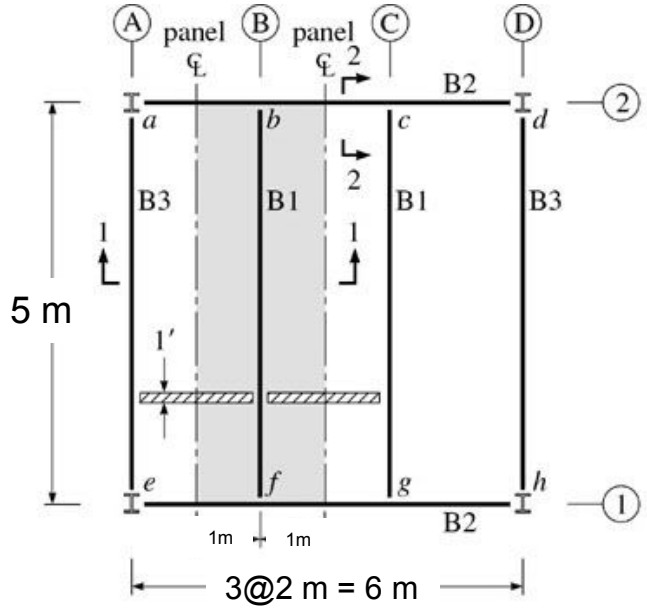

(a)

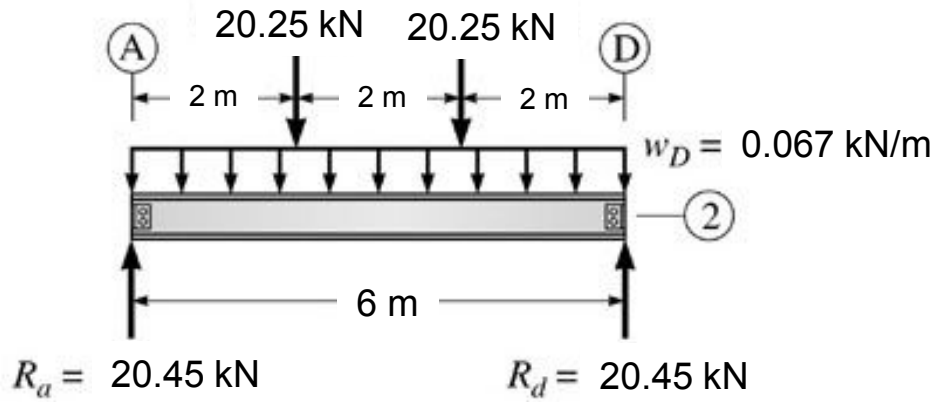

Beam B2

(f)

Loads and Load Analysis
Tributary Areas of Columns

- To determine the dead load transmitted into a column from a floor slab, the designer can either:
  - Determine the reactions of the beams framing into the column, **or**
  - Multiply the tributary area of the floor surrounding the column by the magnitude of the dead load per unit area acting on the floor,
  - The tributary area of a column is defined as the area surrounding the column that is bounded by the panel centerlines.

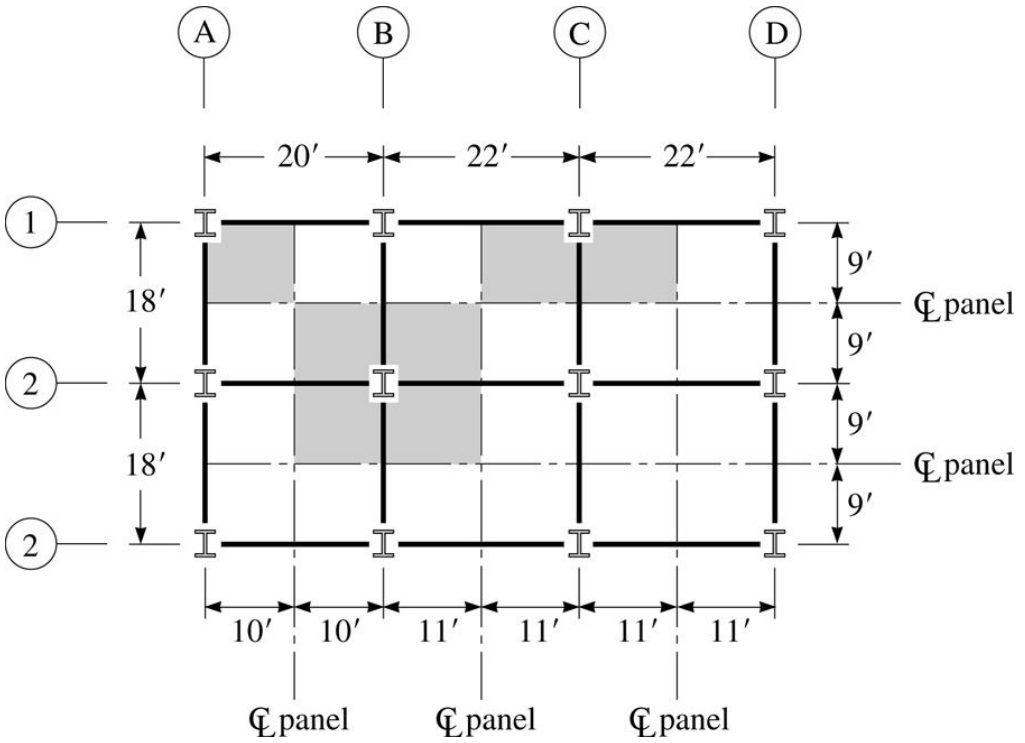

Notice that in the above case, an internal columns support approximately 4 times more floor dead load than corner columns.

Loads and Load Analysis
Tributary Areas of Columns

- Example:
- Using the tributary area method, compute the floor dead loads supported by columns A1 and B2
  - Floor system is made of concrete and weighing 75 lb/ft^2
  - Floor beams, utilities, suspended ceiling weigh 15 lb/ft^2
  - Precast exterior wall supported by the perimeter beams weighs 600 lb/ft

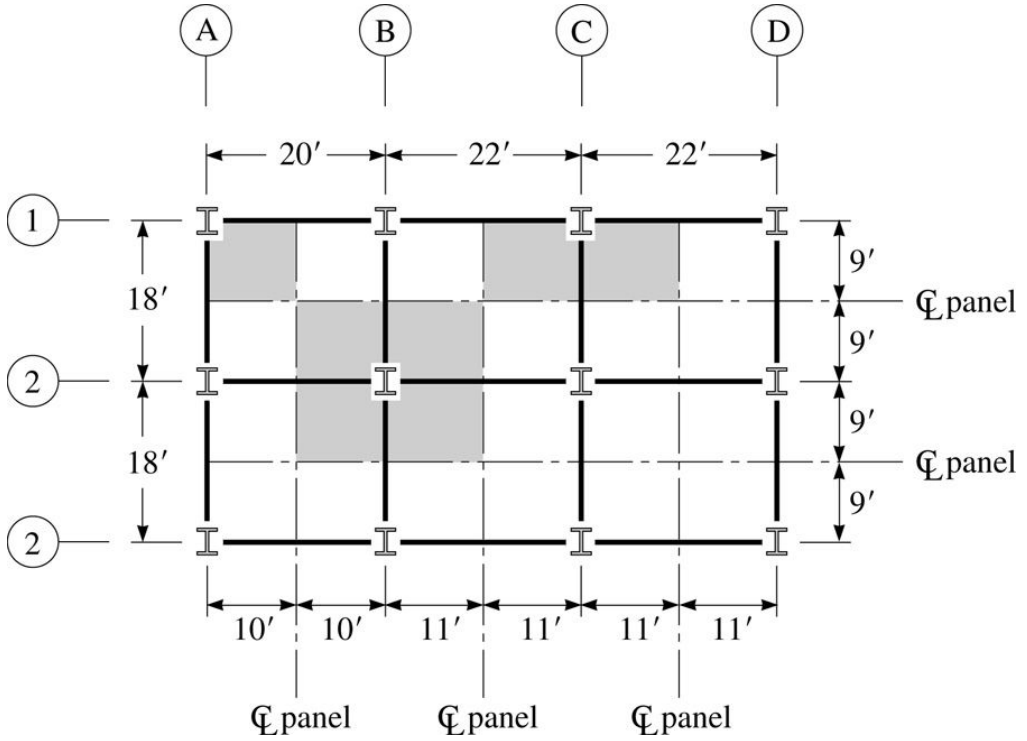

Loads and Load Analysis
Tributary Areas of Columns

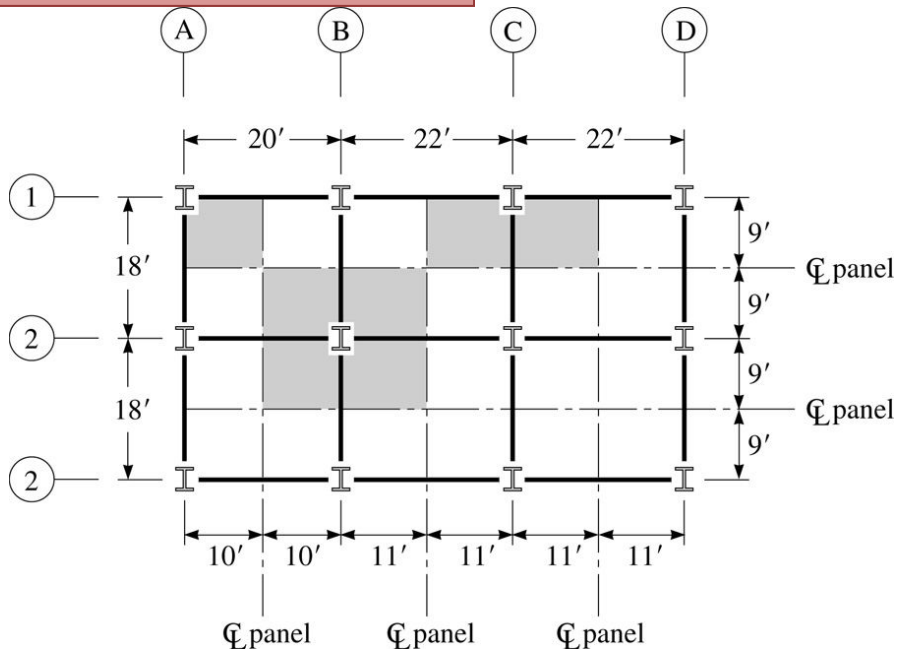

- Example:
- Total floor dead load:
  - D = 75 + 15 = 90 lb/ft^2 = 0.09 kip/ft^2
  - Dead Load for A1
    - Tributary area = 9 ft * 10 ft = 90 ft^2
    - Floor dead load = 90 ft^2 * 0.09 kip/ft^2

      = 8.1 kips
    - Weight of exterior wall = 0.6 lb/ft *(10+9) ft = 11.4 kips
    - Total dead load = 8.1 + 11.4 = 19.5 kips
  - Dead Load for B2
    - Tributary area = 18 ft *21 ft = 378 ft^2
    - Total dead load = 378 ft^2 * 0.09 kip/ft^2 = 34.02 kips

Loads and Load Analysis
Live Loads

- Live loads are the loads that can be moved on or off of a structure (weight of people, furniture, machinery etc.)
- The live loads can change in function of the type of building and they change in time (can be considered as dynamic loads)
- In building codes, specific tables are provided to evaluate live loads as a function of building type (TS 498, Eurocode 1- Part 1, ASCE 7)

A portion of ASCE minimum live loads are provided here.

TABLE 2.2
Typical Design Floor Live Loads, L_o

Occupancy Use	Live Load, lb/ft² (kN/m²)
Assembly areas and theaters	
Fixed seats (fastened to floor)	60 (2.87)
Lobbies	100 (4.79)
Stage floors	150 (7.18)
Libraries	
Reading rooms	60 (2.87)
Stack rooms	150 (7.18)
Office buildings	
Lobbies	100 (4.79)
Offices	50 (2.40)
Residential (one- and two-family)	
Habitable attics and sleeping areas	30 (1.44)
Uninhabitable attics with storage	20 (0.96)
All other areas (except balconies)	40 (1.92)
Schools	
Classrooms	40 (1.92)
Corridors above the first floor	80 (3.83)
First-floor corridors	100 (4.79)

Loads and Load Analysis
Live Loads

Eurocode 1991-1-1
Actions on Structures

CATEGORY A Area for domestic and residential activi...
CATEGORY B Office areas
CATEGORY C Areas where people may congregate
CATEGORY D Shopping areas

- In table 6.2 are reported the load values.

Table 6.2 - Imposed loads on floors, balconies and stairs in buildings

Categories of loaded areas	q_k [kN/m²]	Q_k [kN]
Category A		
- Floors	1,5 to 2,0	2,0 to 3,0
- Stairs	2,0 to 4,0	2,0 to 4,0
- Balconies	2,5 to 4,0	2,0 to 3,0
Category B	2,0 to 3,0	1,5 to 4,5
Category C		
- C1	2,0 to 3,0	3,0 to 4,0
- C2	3,0 to 4,0	2,5 to 7,0 (4,0)
- C3	3,0 to 5,0	4,0 to 7,0
- C4	4,5 to 5,0	3,5 to 7,0
- C5	5,0 to 7,5	3,5 to 4,5
category D		
- D1	4,0 to 5,0	3,5 to 7,0 (4,0)
- D2	4,0 to 5,0	3,5 to 7,0

Loads and Load Analysis
Other Loads

- **Snow Loads:**
  - Considered for cold regions
  - Values are regionalized and provided in building codes (EN 1991-1-3 or TS-498)
- **Wind Loads:**
  - The magnitude of wind pressure on a structure depends on the wind velocity, shape and stiffness of the structure, roughness and profile of the surrounding ground, influence of adjacent structures,

Loads and Load Analysis
Other Loads

- Wind Loads (continued):

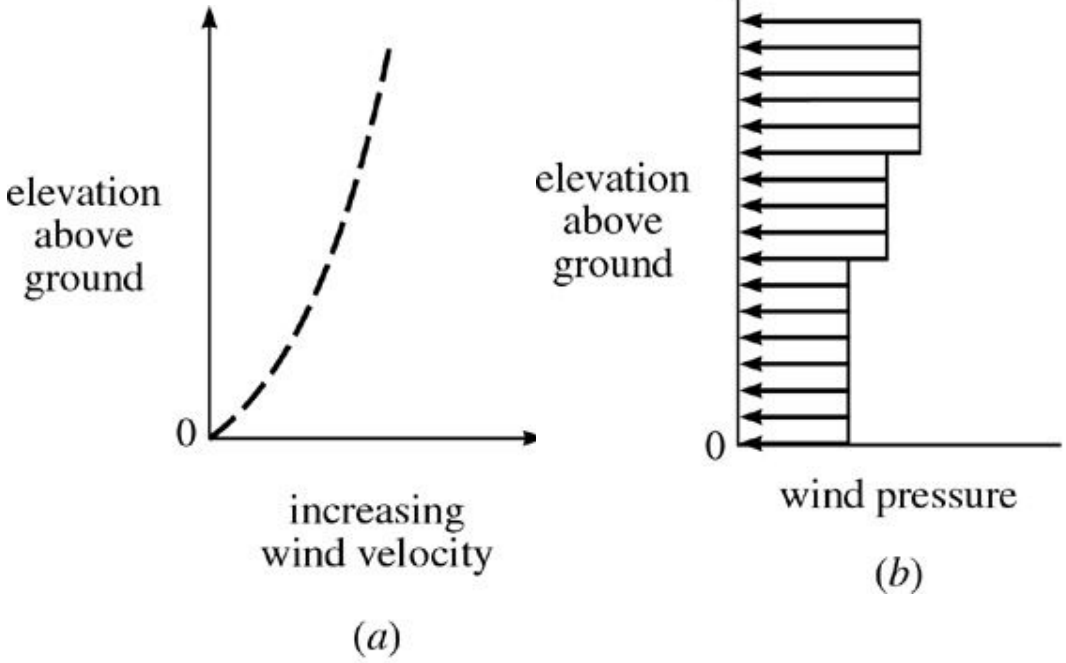

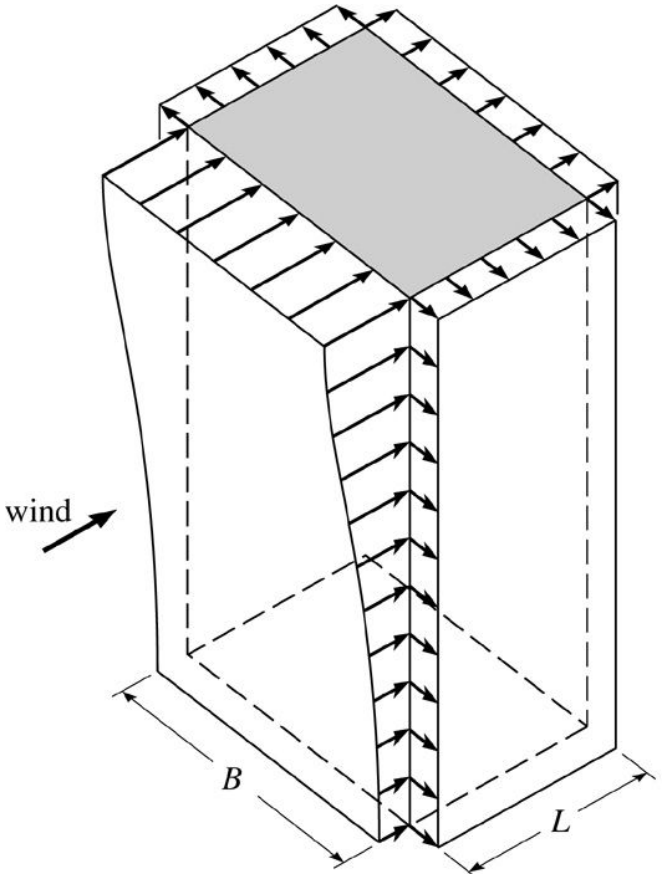

Typical wind load distribution on a multistory building.

Loads and Load Analysis
Other Loads

- **Earthquake Loads:**
  - Earthquakes occur in many regions of the world. In certain locations where the intensity of the ground shaking is small, the designer does not have to consider seismic effects.
  - In other locations –particularly in regions near and active geological fault, such as North Anatolian Fault Zone or San Andreas Fault zone in western coast of CA and etc., large ground motions frequently occur that can damage or destroy buildings.

Loads and Load Analysis
Other Loads

- **Earthquake Loads (continued):**
  - The ground motion created by major earthquake forces cause buildings to sway back and forth. Assuming the building is fixed at its base, the displacement of floors will vary from zero at the base to a maximum at the roof,

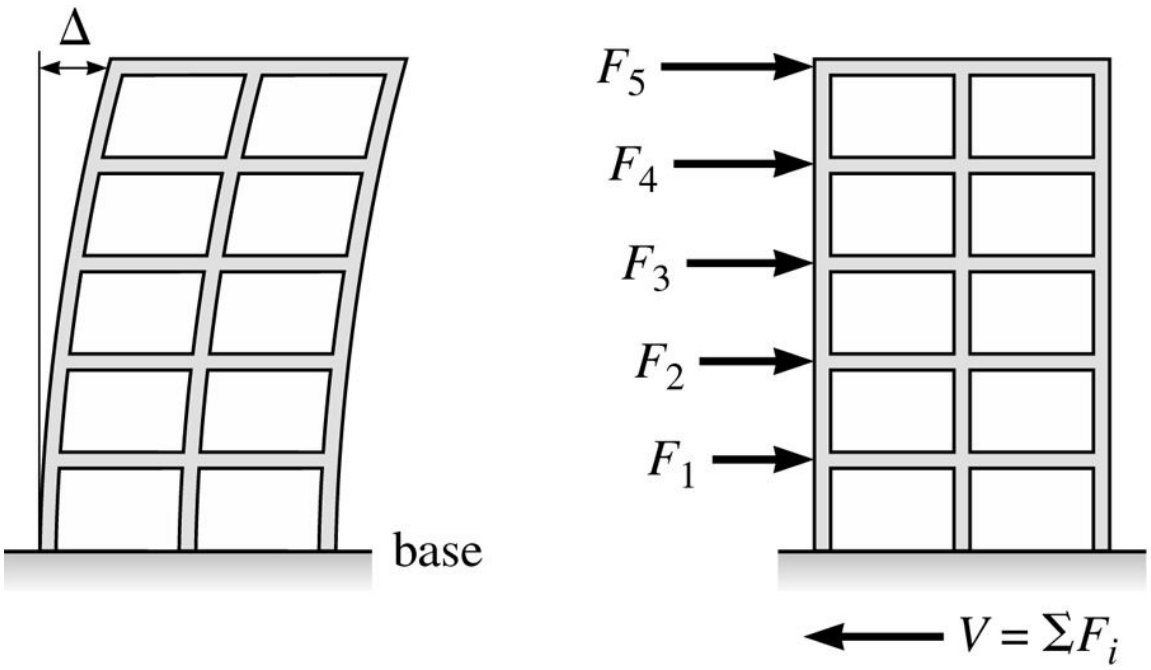

Loads and Load Analysis
Other Loads

- **Earthquake Loads (continued):**
  - Earthquake forces to be used in design of structures are defined in building codes
    - Turkish Earthquake Code (2007)
    - EN-1998-1 (Eurocode 8) (2004)
    - ASCE 7 (2005)

Loads and Load Analysis
Load Combinations

- The forces produced by various ways discussed above need to be combined in a proper manner,
- And need to be increased by a factor of safety (load factor) to produce the desired level of safety,
- The combined load effect, sometimes called the required factored strength, represents the minimum strength for which members need to be designed,
- Some examples of load combinations are given below (these combinations are defined in building codes):
    - 1.4D
    - 1.2D + 1.0E + L + 0.2 S

where D: dead load, E: earthquake load, L: live load, S: snow load