BUILDING DESIGN

10.1 DESIGN OF SLAB

DESIGN BY COEFFICIENT METHOD

Loads:

DL = 150 pcf
LL = 85 pcf

Material Properties:

fc' = 3000 psi
fy = 60,000 psi

Design the *panel* (S_4) as two-way slab with beam by *coefficient Method*.

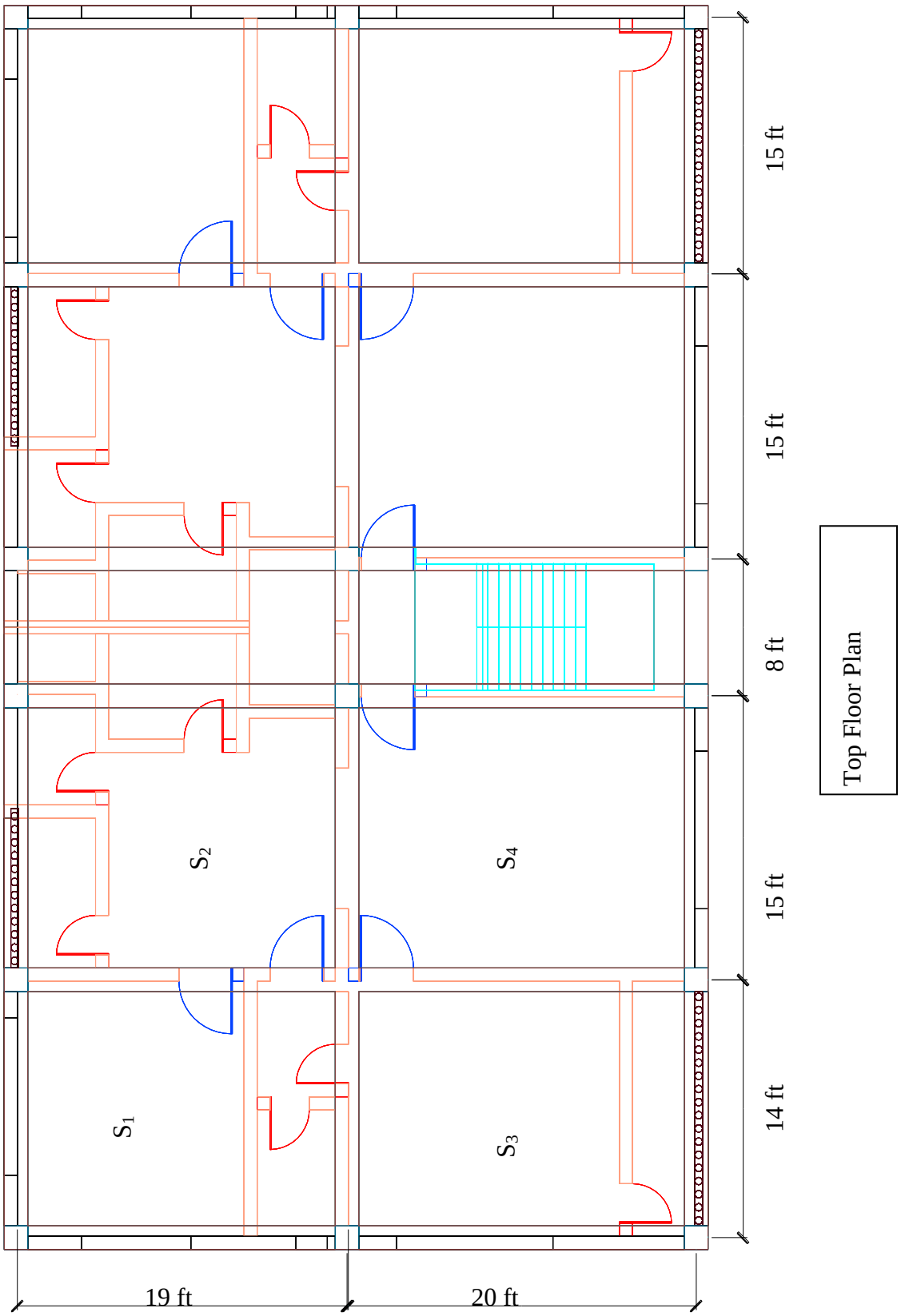

Figure 10.2: Top floor plan

Step1: Determination of Minimum Thickness

$$h = \frac{p}{180} = \frac{840}{180} = 4.67 \text{ in.}$$

whwre, P = 2 (15+20) = 840

Select h = 5 in. as trial depth

Step 2 : Calculation of Factored Load

$$DL = w_c * \frac{h}{12} \text{ psf}$$

$$DL = 150 \text{ x } \frac{5}{12} = 62.5 \approx 63 psf \text{ ; where } w_c = 150 \text{ pcf}$$

LL = 85 psf

W = 1.4D + 1.7 L = (1.4 * 63 + 1.7 * 85) = 232.7 psf

Step 3 : Determination of Moment Coefficient

$$\text{Length ratio, } m = \frac{l_a}{l_b} = \frac{15}{20} = .75$$

From the end condition case type is ***'Case 4'***

- From *Appendix D-1*

  $C_{a,\ neg} = 0.076$; $C_{b,\ neg} = 0.024$

- From *Appendix D-2*

  $C_{a,dl,pos} = 0.043$; $C_{b,dl,pos} = 0.013$

- From *Appendix D-3*

  $C_{a,ll,pos} = 0.052$; $C_{b,ll,pos} = 0.016$

Step 4 : Calculation of Moment

Middle Strip Moment:

- Positive Moments at Midspan

  $$M_{a,pos} = C_{a,dl}\, W l_a^2 + C_{a,\ ll}\, W l_a^2$$

$M_{a,pos} = 0.043 * 232.7 * 15^2 + 0.052 * 232.7 * 15^2$
$= 4974$ ft-lb

$M_{b,pos} = C_{b,\ dl}\, W l_b^2 + C_{a,\ ll}\, W l_b^2$

$M_{b,pos} = 0.013 * 232.7 * 20^2 + 0.016 * 232.7 * 20^2$
$= 2699$ ft-lb

- Negative Moments at Continuous Edge

$M_{a,neg} = C_{a,neg}\, W\, l_a^2 = 0.076 * 232.7 * 16^2 = 4527$ ft – lb
$M_{b,neg} = C_{b,neg}\, W\, l_b^2 = 0.024 * 232.7 * 20^2 = 2234$ ft – lb

- Negative Moment at Discontinuous Edge

$M_{a,neg,\ discontinuous} = \frac{1}{3} * M_{a,pos} = \frac{1}{3} * 4527 = 1509$ ft – lb
$M_{b,neg,\ discontinuous} = \frac{1}{3} * M_{b,pos} = \frac{1}{3} * 2234 = 745$ ft – lb

Column Strip Moment:

Column strip moments are 2/3 of corresponding middle strip's moments in respective direction.

Step 5 : Check the Design Thickness

$$d = \sqrt{\frac{M_u}{\phi\rho f_y (1 - 0.59\rho \frac{f_y}{f_{c'}})}}$$

Here $\rho = \rho_{max} = 0.75\rho_b = 0.75 * 0.85 * \beta_1 \frac{f_c^{/}}{f_y} * \frac{87000}{87000 + f_y} = 0.016$

$$d = \sqrt{\frac{4974*12}{0.90*0.016*60{,}000*12(1 - 0.059*0.016*\frac{60}{3})}} = 2.66 \text{ in.}$$

$h_{required}$ = (d + clear cover= 1 in) = 3.66 in.

$h_{required} < h_{design,}$ design is ok

Step 6 : Calculation for Reinforcement for Middle Strip

In Short Direction:

Minimum reinforcement:

As = 0.0018*b*d
= 0.0018*12*4
= 0.0864=0.09in^2/ft

Spacing, S_{max}= 2*h= 10”

- Midspan

M_u = 4974 *12 lb- in.

By *Iteration process*

Trial No.	Trial, a	As $= \frac{M_u}{\phi f_y \left(d - a/2\right)}$	a $= \frac{A_s f_y}{0.85 f_c' b}$	Remark
1	2	0.36	0.72	not ok
2	0.72	0.28	0.55	not ok
3	0.55	0.3	0.58	nearly ok
4	0.58	0.3	0.58	ok

Using # 3 bar required spacing:

Spacing = $\frac{12x0.11}{0.30} = 4.4 \approx 4''c/c$

- Continuous Edge

M_u = 4527 *12 lb- in.
By *Iteration process*
As = 0.27 in^2/ft.

Using # 3 bar required spacing:

Spacing = $\frac{12x0.11}{0.27} = 4.88''. \approx 4.5''c/c$

- Discontinuous Edge

As = 0.084 in^2/ft <$As_{(min)}$

Using # 3 bar required spacing:

$$\text{Spacing} = \frac{12x0.11}{0.084} = 15.7'' \approx 10''c/c$$

In long Direction:

As = 0.0018*b*d
= 0.0018*12*3.5
= 0.0756=0.08in^2/ft

- Midspan

M_u = 2699 *12 lb- in.

By *Iteration process*
As = 0.15 in^2/ft.
Using # 3 bar required spacing:

$$\text{Spacing} = \frac{12x0.11}{0.15} = 8.8 \approx 8.5''c/c$$

- Continuous Edge

M_u = 2234 *12 lb- in.

By *Iteration process*
As = 0.12 in^2/ft.
Using # 3 bar required spacing:

$$\text{Spacing} = \frac{12x0.11}{0.12} = 11 \approx 10''c/c$$

- Discontinuous Edge

As = 0.04 in^2/ft <$As_{(min)}$

Using # 3 bar required spacing:

$$\text{Spacing} = \frac{12x0.11}{0.04} = 33''c/c = 10 \text{ in.c/c}$$

- Cornar reinforcement

  # 3 @ 4 in c/c upto L/5 in respective directions.

Step 7 : Calculation for Reinforcement for Column Strip

The average moments in columns being two-third of the corresponding moments in the middle strips, adequate steel will be furnished if the spacing of this steel is $\frac{3}{2}$ times that in the middle strip.

Using # 3 bar spacing for column strip

- Midspan = 4 x $\frac{3}{2}$ = 6″ c/c
- Continuous edge = 4.5x$\frac{3}{2}$ = 7.5″ c/c
- Discontinuous edge = 10x$\frac{3}{2}$ = 15″ c/c

But maximum allowable spacing = 2h = 10 in.
Use10″ c/c

Step 8: Check for shear

Total load = 232.7*20*15
= 69810 lb
From *Appendix D-4*
m= .75' case-4
Wa= .76
Wb= .24

$$V_{u,a}= \frac{69810*.76}{2*(20+15)} = 748 lb/ft$$

$$V_{u,a}= \frac{69810*.24}{2*(20+15)} = 236 lb/ft$$

Slab strength = $ØV_c$= Ø*2* $\sqrt{f_c'}$*b*d
= 0.85*2*√3000*12*4
= 4470 lb >>V_u ; Ok.

Step 9: Detailing

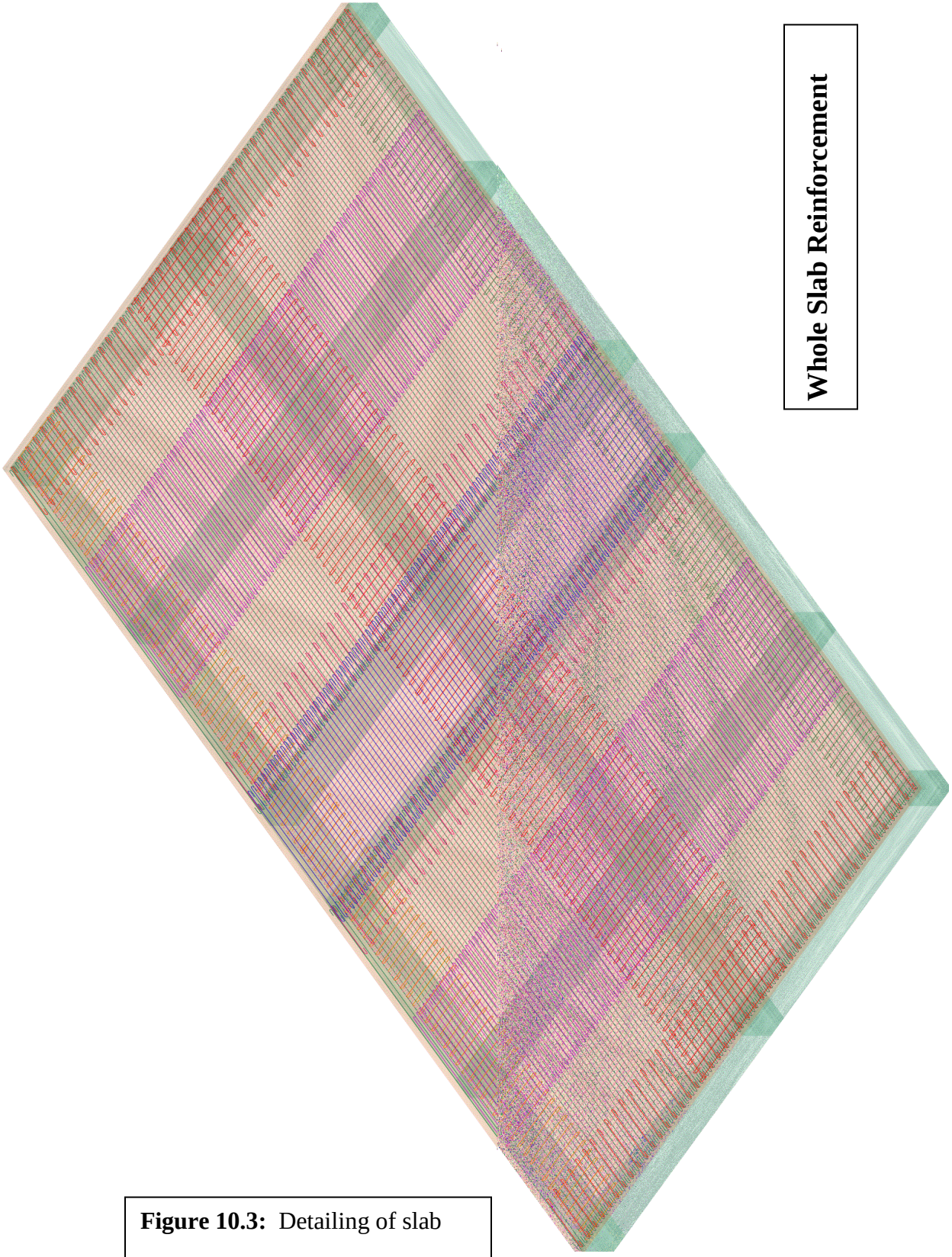

Figure 10.3: Detailing of slab

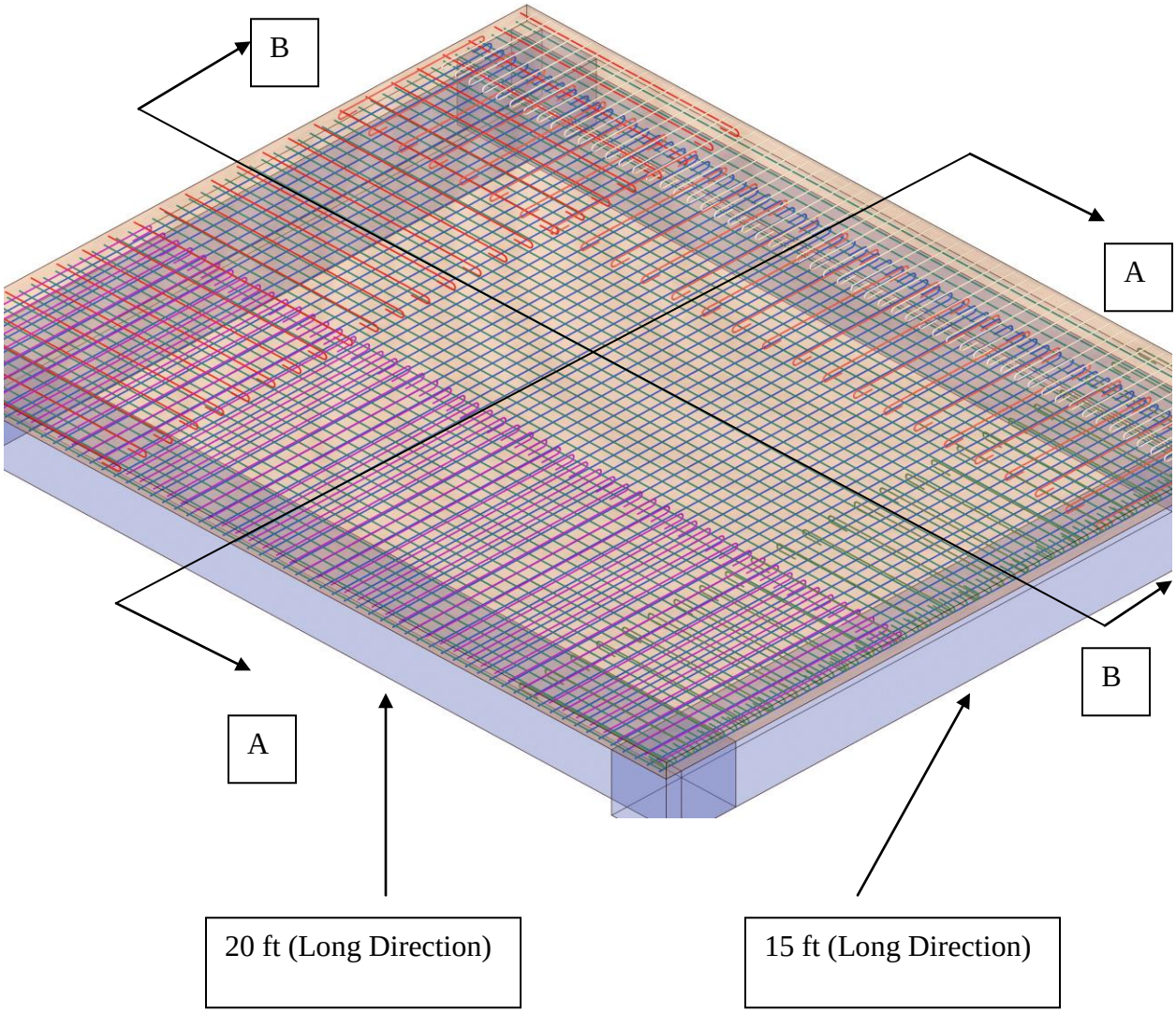

Figure 10.3: Detailing of slab (continued)

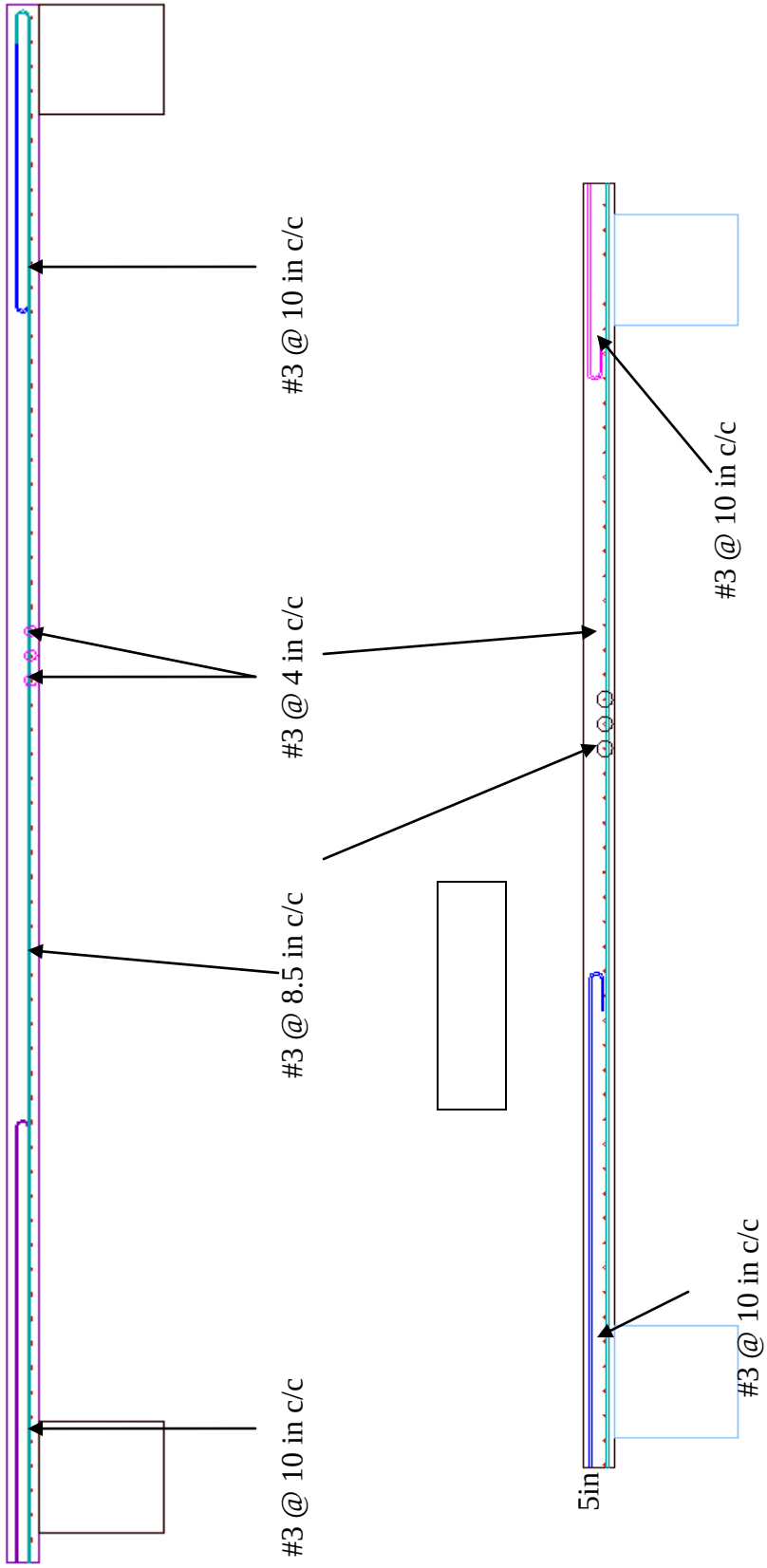

Section A-A

Figure 10.3: Detailing of slab (continued)

10.2 DESIGN OF BEAM

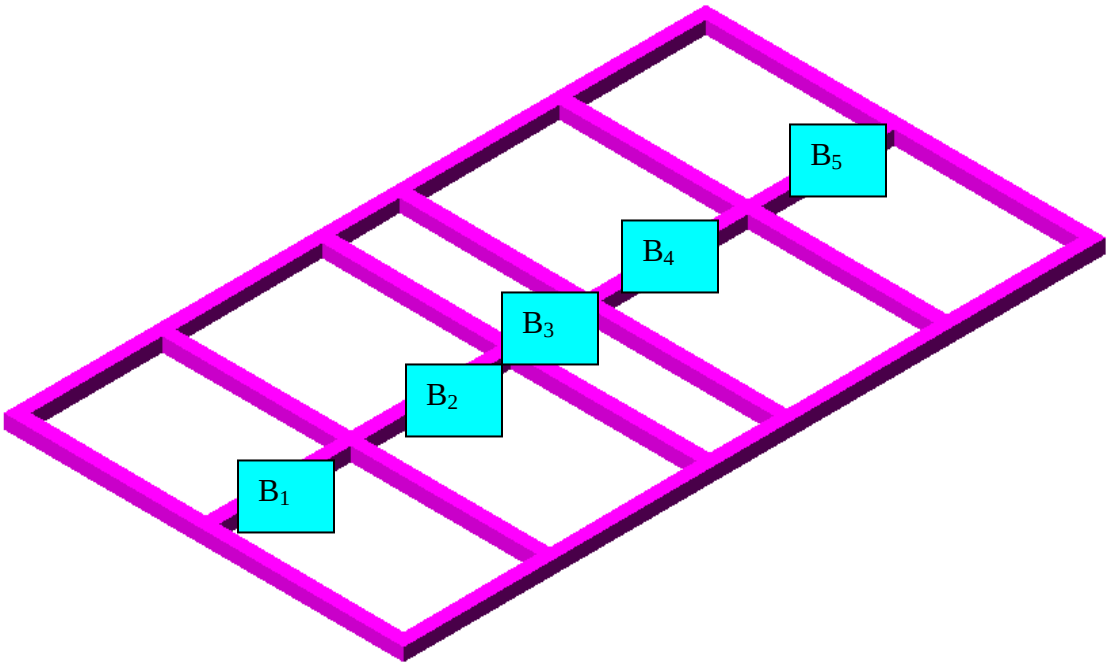

Figure10.4: Beam for Design

Step 1: Determination of load on the Beam (we have used E-TABS data, but conventional approach is like this)

For beam B_2:

Slab area $= (\frac{a*b}{2} - \frac{a*a}{4})$

$= (\frac{14*19}{2} - \frac{14*14}{4}) + (\frac{15*19}{2} - \frac{15*15}{4}) = 170.25 sft$

Slab load = 170.25*(5/12)*150= 10641 lb

= 10641/14= 760 lb/ft

Choosing of beam is a matter of trial and error or experience

For this beam let assume a 12 inch X 16 inch section.

Weight of beam $= \frac{12}{12} \times \frac{16}{12} \times 150 = 200 lb/ft$

Wall load = 1000 lb/ft

$\therefore Deadload = (760 + 200 + 1000) = 1960 lb/ft$

Live load=85 psf

Total live load= $85 \times 170.25 \div 14 = 1034$ lb/ft

Factored load U=1.4D+1.7L= $1.4 \times 1960 + 1.7 \times 1034 = 4502$ lb/ft

So for this case,

Total load, w_u = 4.5 k/ft

Beam	Lenth (ft)	Section (in*in)	Area contributi-ng (ft^2)	DL (slab) (lb/ft)	DL (beam) (lb/ft)	Wall load (lb/ft)	Total DL (lb/ft)	Total LL (lb/ft)	Total factore-d load (lb/ft)
B_1	14	12*16	170.25	760	200	1000	1960	1034	4502
B_2	15	12*16	184.75	770	200	1000	1970	1047	4538
B_3	8	12*16	10.75	84	200	1000	1284	114	1591
B_4	15	12*16	184.75	770	200	1000	1970	1047	4538
B_5	14	12*16	170.25	760	200	1000	1960	1034	4502

Step 2: Determination of approximate moment (we have used E-TABS data, but conventional approach is like this)

Approximate Moment

$$M_u(-) = 0.08 \times w \times l^2$$

$$M_u(+) = 0.045 \times w \times l^2$$

The Beam should be designed for highest negative moment, that is 81.72 ft –kips.

Step 3: Selection of the cross sectional dimension of the (we have used ETABS data, but conventional approach is like this)

Minimum thickness

$$\frac{l}{21} = \frac{15 \times 12}{21} = 8.6''\text{ in} = 12\text{ in.}$$ (Keeping the assumed size)

Width from equation

$$M_u = \phi \rho f_y b d^2 \left(1 - 0.59\rho \frac{f_y}{f_{c'}}\right)$$

$$\therefore b = \frac{M_u}{\phi \rho f_y d^2 \left(1 - 0.59\rho \frac{f_y}{f_{c'}}\right)}$$

$$= \frac{81.72 \times 12}{0.016 \times 60 \times (12 - 2.5)^2 \left(1 - 0.59 \times 0.016 \frac{60}{3}\right)}$$

= 13.95 in = 14 in can be taken.

Here,

M_u = 980.64 in-kips

$$\rho = \rho_{\max} = \rho_b \times 0.75$$

$$\rho_b = 0.85 \times \beta_1 \times \frac{f_{c'}}{f_y} \times \frac{87000}{87000 + f_y}$$

$$\beta_1 = 0.85 - 0.05 \frac{3000 - 4000}{1000} (0.65 \le \beta_1 \le 0.85)$$

$$\therefore \beta_1 = 0.85$$

$$\therefore \rho_b = 0.85 \times 0.85 \times \frac{3}{60} \times \frac{87}{87 + 60} = 0.021$$

$$\therefore \rho_{\max} = 0.75 \times 0.021 = 0.016$$

Using ETABS the analysis this step can be done. A beam section of 12in x16in and column of 18in x 18 in is chosen and analyzed. The followed moments were found.

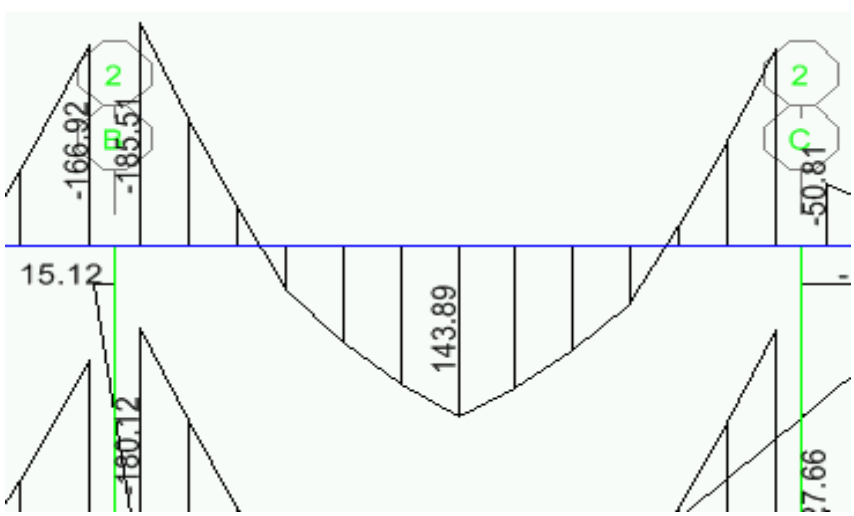

Figure 10.5: BMD of B_2 from ETABS (top floor)

Step 4: Determination whether the Beam has to be designed as Singly or Doubly reinforced

If we add the slab thickness h_f =5 in with the Beam thickness 16 in,

Then we get total depth, h=21 in.

Effective depth=17in.

And web width, b=12 in.

Assuming singly reinforced beam,

Steel area, $A_s = \rho bd$

$A_s = 0.016*12*17$

$A_s = 3.264\ in^2$

Here,

$$\rho = \rho_{max} = \rho_b \times 0.75$$

$$where, \rho_b = 0.85\beta_1 \frac{f_{c'}}{f_y} \frac{87000}{87000 + f_y}$$

$\rho_b = 0.016$

Now,

$$a = \frac{A_s f_y}{0.85 f_{c'} b}$$

$$a = \frac{3.264 \times 60}{0.85 \times 3 \times 12}$$

=6.4 in

And $M_n = A_s f_y (d - a/_2)$

$M_n = 3.264*60*(17-6.4/2)$

M_n = 2702.5 in-kips > Imposed moment = 185.5*12 k-ft.

So the beam is to be design as singly reinforced beam.

Step 5: Determination whether the beam has to be designed as Rectangular Beam or a T Beam

Effective flange width b

Smallest of the following three condition will determine the effective flange width b.

- Span/4= 15*12/4= 45in.
- $b = 16h_f + b_w = 16 \times 5 + 12 = 92$ in.
- c/c distance/2= 120in.

So effective flange width b=45 in.

Let a= $h_{f=}$ 5 in

Now, $A_s = \dfrac{M_u}{\phi f_y \left(d - \dfrac{a}{2}\right)}$

$$A_s = \frac{185.508 \times 12}{.9 \times 60\left(17 - \dfrac{5}{2}\right)}$$

$= 2.83 \text{ in}^2$

So, $\rho = \dfrac{2.83}{45 \times 17}$ =.0037

Now, $a = \dfrac{\rho f_y d}{0.85 f_{c'}} = \dfrac{0.0037 \times 60 \times 17}{0.85 \times 3} = 1.48$ in.

as $a < h_f$

So the beam will be designed as rectangular beam which would have the following cross section.

Step 6: Rectangular Beam Design

Now $A_s = \dfrac{M_u}{\phi f_y \left(d - \dfrac{a}{2}\right)}$

And $a = \dfrac{Asf_y}{0.85 f_{c'} b}$

Trial No.	Assumed a	As $= \dfrac{M_u}{\phi f_y \left(d - a/2\right)}$	a $= \dfrac{A_s f_y}{0.85 f_c' b}$	Remark
1	2	2.57	1.29	not ok
2	1.29	2.52	1.26	ok

Here M_u= 185.508 k-ft (considering ETABS data)

Beam	$M_{u(+)}$	Reinforcement(in^2)	$M_{u(-)}$	Reinforcement(in^2)
B_1	83.46	1.11; 2 # 7 √	166.92	2.25; 4#6 √
B_2	92.75	1.13; 2 # 7 √	185.508	2.50; 4#8 √
B_3	25.4	0.17;2 # 3 ≈ 2#7 √	50.8	0.68; 2#5 ×
B_4	92.75	1.13; 2 # 7 √	185.508	2.50; 4#8 √
B_5	83.46	1.11; 2 # 7 √	166.92	2.25; 4#6 √

Step 7: Shear Reinforcement

$V_c = 2\sqrt{f_{c'}} b_w d$

$= 2 \times \sqrt{3000} \times 12 \times 17 = 22.35$ kips.

$V_u = 58.27$ kips.

$\phi V_c = 0.85 \times 22.35 = 19$ kips.

Now wherever of the beam the V_u exceeds ϕV_c we need to provide shear reinforcement.

For this case nowhere of the beam the shear exceeds ϕV_c but minimum reinforcement required where shear force exceeds $\dfrac{\phi V_c}{2} = \dfrac{17.87}{2} = 8.94$ kips.

$$s = \frac{\phi A_v f_y d}{V_u - \phi V_c}$$

Using # 3 bar

$s = \frac{.85 \times .22 \times 60 \times 17}{58.27 - 19} = 4.85 \approx 4.5in$ up to 5 ft from support on each side. The rest with minimum spacing.

As $V_s \leq 4\sqrt{f_{c'}} b_w d$

$$S_{\max} = \frac{d}{2} = \frac{17}{2} = 8.5in$$

First stirrup at $\frac{s}{2} = \frac{4.5}{2} = 2.25 \approx 2.5$ in.

Step 8 & 9: Design for Torsion and Serviceability

Normally in buildig design torsion and Serviceability is not considered because the tortional effect is normally countered by shear reinforcement.

Step 10: Detailing

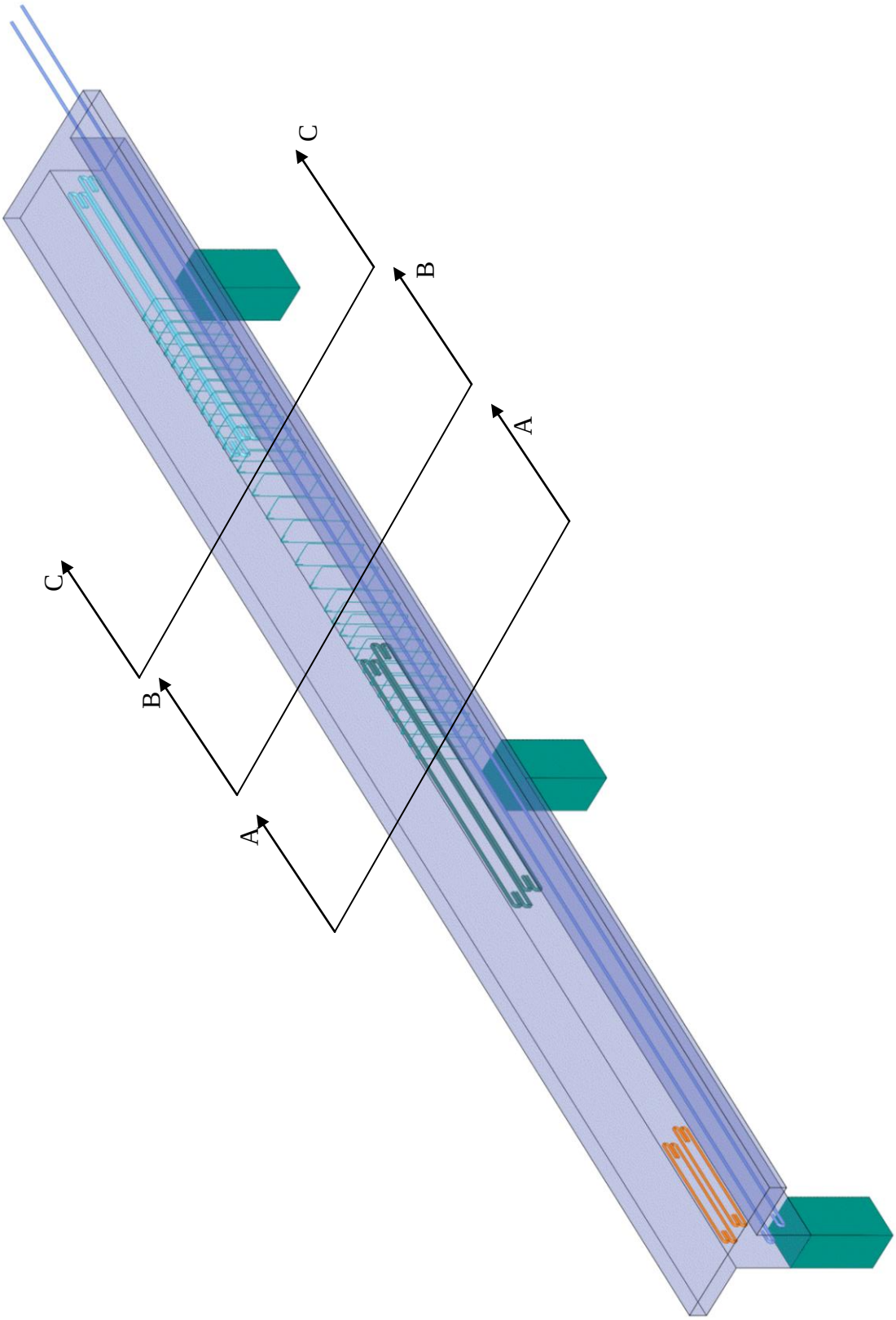

Beam

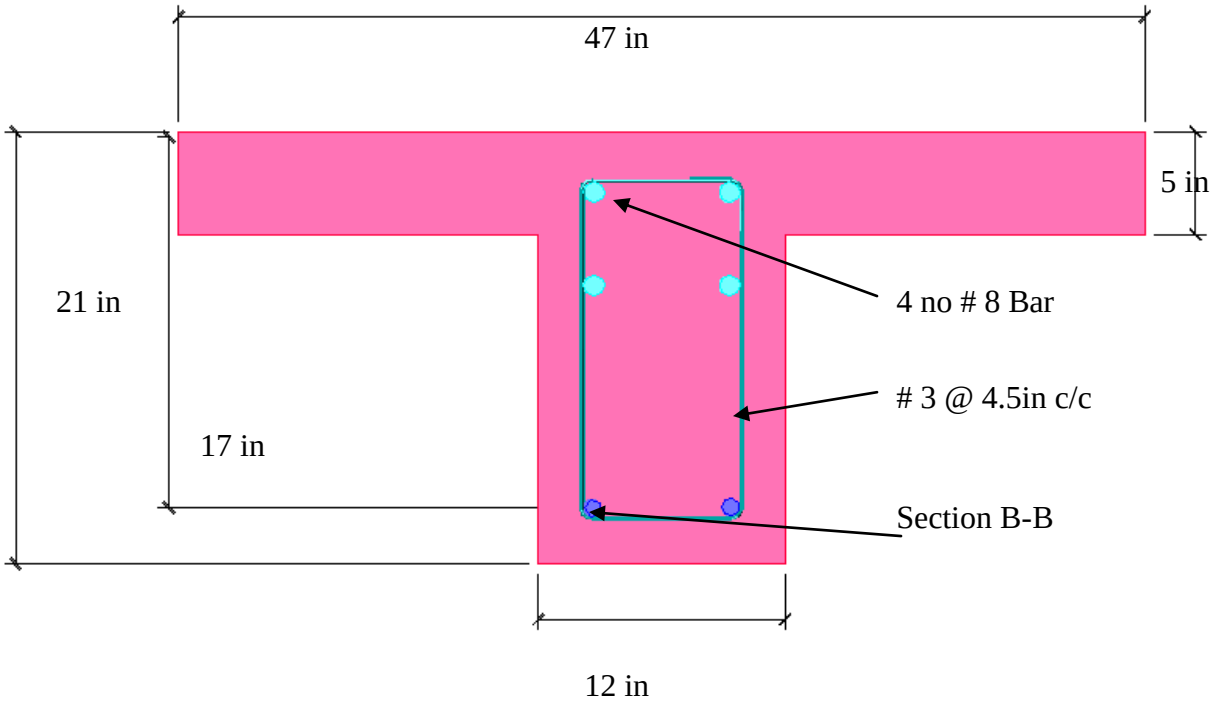

Section A-A

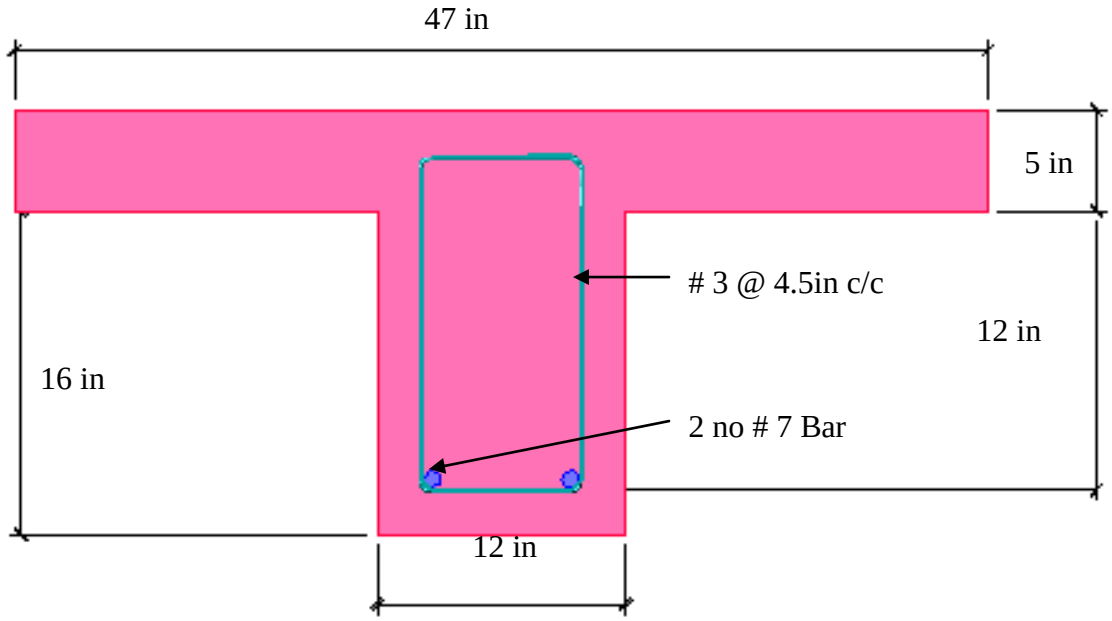

Section B-B

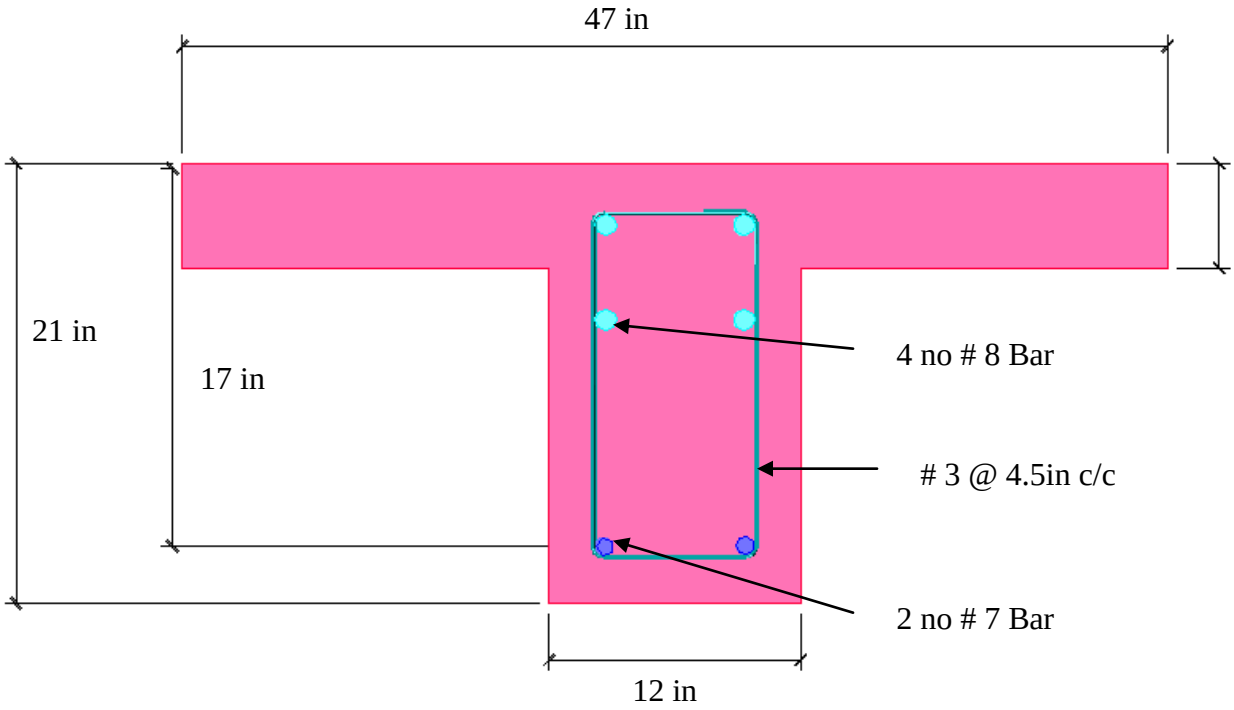

Section C-C

Figure 10.6: Detailing of beam (continued)

10.3 DESIGN OF COLUMN

Design of column **C** subject to axial load as a tied column with following data:

$f_c^{'}$ = 4 ksi (as column requires more importance in design and better quality)

f_y = 60 ksi

Step 1: Determination of Factored Load

P_u = 1.4 D + 1.7 L
These values were collected from E TABS.

Step 2: Steel Ratio Assumption

Since value of axial load is low, take ρ_g = 0.04

Step 3: Determination of Concrete Gross Area

Pu = 0.80 A_g $\phi \left[0.85 f_c'(1-\rho_g)+\rho_g f_y\right]$
For tied column $\phi = 0.70$, $p_u = 380$ kips
686=.80 A_g * 0.70 [0.85 * 4(1- 0.04) + 0.04 * 60]
A_g = 216 in^2

Step 4: Selection of Column Size

Let us choose a square column of size = 14in. x 18 in.
A_g = 252 in^2

Step 1, 2, 3 & 4 is done by following table (Data From ETABS)

Combination	P_u(kips)	$M_x$ip in)	M_y(kip in)	Section
1	563	628	648	14”*16”
2	845	845	782	14”*18”
3	595	595	39	14”*14”
4	672	672	40	14”*16”
5	410	410	26	12”*14”
6	442	442	27	12”*14”
7	734	734	709	14”*18”
8	784	784	714	14”*18”
9	288	288	18	12”*14”
10	300	300	18	12”*14”

Step 5 : Check for Steel Ratio

$$P_u = 0.80\ A_g\ \phi\left[0.85 f_c'(1-\rho_g) + \rho_g f_y\right]$$
$$= (0.80 * 252 * 0.70)\ \left[0.85 * 4(1-\rho_g) + \rho_g * 40\right]$$
$$\rho_g = 0.026 = 2.6\%;\ \text{Limit of } \rho_g \text{ is ok.}$$

Step 6: Calculation of Reinforcement

$$A_{st} = A_g * \rho_g = 252 * 0.026 = 6.55\ \text{in}^2$$

Let us choose # 8 bar ($A_b = 0.79\ \text{in}^2$)

No of bar, $N = \dfrac{A_{st}}{A_b} = \dfrac{6.55}{0.79} = 8 nos.$

Step 7 : Selection of Ties

Use # 3 bar for ties

Step 8 : Determination of Vertical Spacing of Ties

- 16 d_b of longitudinal reinforcement = 16 x 1 = 16in (dia # 8 = 1 in)
- 48 d_b of tie bar = 48 x 0.375 = 18 in
- Least dimension of column section = 14 in

Choose vertical spacing of ties = 14 in

Step 9: Arrangement of Ties

Clear spacing between longitudinal bars in y direction

=[Column dimension – (2 x clear cover) – (2 x dia of ties) – (3 x dia of bar)] ÷ 2
= [18 – (2 x 1.5) – (2* 0.3750) – (3* 1)] ÷2
= 5.625 in < 6 in

No additional ties are required

DESIGN OF COLUMN FOR BIAXIAL BENDING USING LOAD CONTOUR METHOD

Step 1 : Determination of Factored Load and Moment

P_u = 1.4D + 1.7L = 686kip *(ACI Code-00)*

$\phi M_{nx} = M_{ux}$=845kip-in and $\phi M_{ny} = M_{uy}$ =782kip-in

Step 2 : Selection of Chart from Appendix F for Bending About X- Axis

Find: $\gamma = \dfrac{h-2d'}{h} = \dfrac{18-2\times 2.5}{18} = .72 \approx .75$

Selecting the design chart of *Appendix F* chart corresponding to γ

Step 3 : Determination of Moment Parameter for Bending About X – Axis

Find: $\dfrac{\phi P_n}{A_g} = \dfrac{686}{18\times 14} = 2.72$ and ρ_g=0.04

Intersection of these two points on the chart given the value of $\dfrac{\phi M_{nxo}}{A_g h}$ =0.425

Determine ϕ M_{nxo} = $0.425\times 252\times 18 = 1928 kip-in$

Step 4 : Selection of Chart from Appendix F for Bending About Y- Axis

Find $\gamma = \dfrac{h-2d'}{h} = \dfrac{14-2\times 2.5}{14} = 0.64 \approx 0.6$

Selecting chart corresponding to γ

Step 5 : Determination of Moment Parameter for Bending About Y Axis

Find: $\frac{\phi P_n}{A_g} = \frac{686}{252} = 2.72$ and

ρ_g =0.04 (same as step 3)

Intersection of these two points give $\frac{\phi M_{nyo}}{A_g h} = 0.325$

Determine ϕ M_{nyo} = $0.325 \times 252 \times 14 = 1146.6 kip - in$

Step 6 : Checking of Design Strength

$$\left(\frac{\phi M_{nx}}{\phi M_{nxo}}\right)^{1.15} + \left(\frac{\phi M_{ny}}{\phi M_{nyo}}\right)^{1.15}$$

Replacing all the values in equation

$$= \left(\frac{845}{1928}\right)^{1.15} + \left(\frac{782}{1147}\right)^{1.15}$$

=1.03 $\approx$ 1.0 (Design is ok)

Step 7 : Detailing

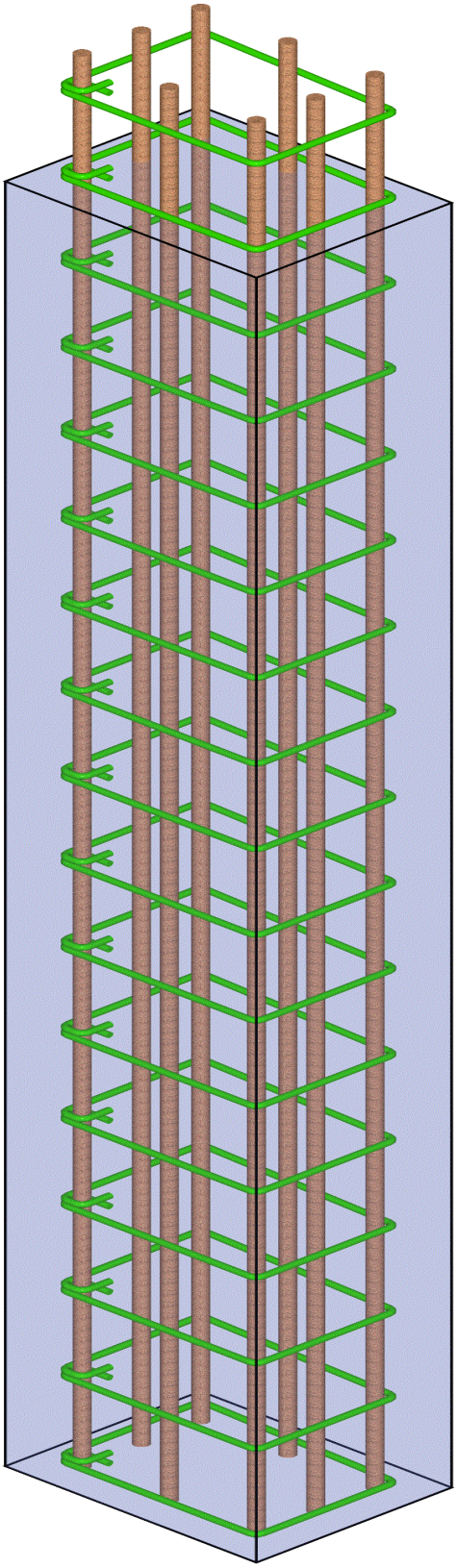

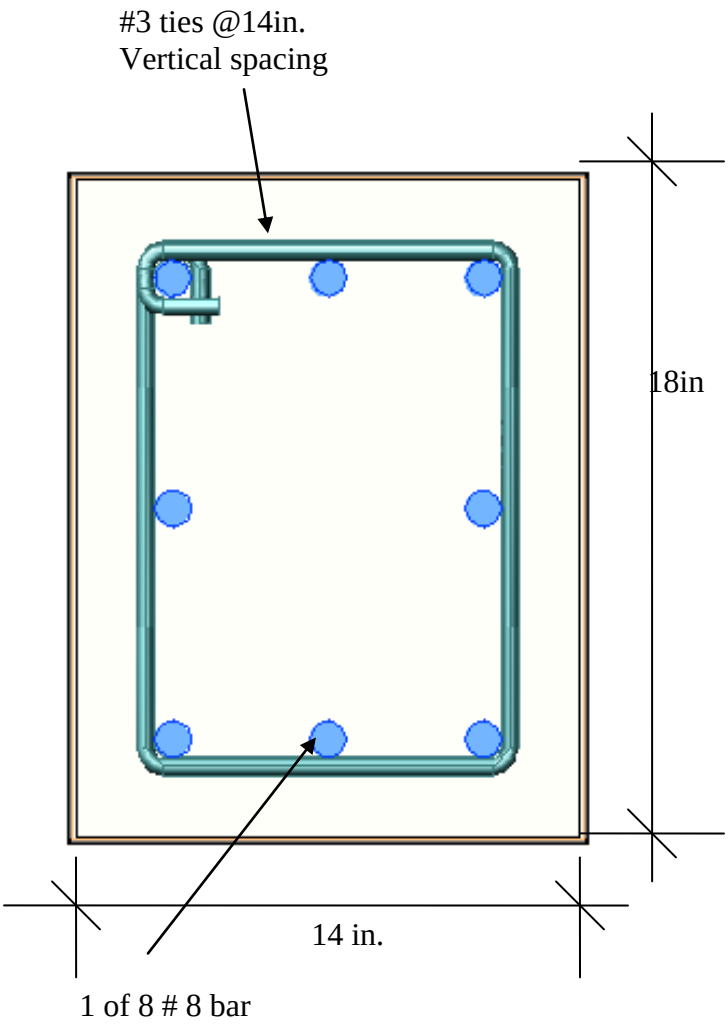

Figure 10.7: Detailing of column

10.4 DESIGN OF FOOTING

Rectangular Footing

Data:

Unfactored column dead load, DL =666.8 K
Unfactored column live load, LL = 144.4 K
Column size = 18 in x 14 in.
Allowable soil pressure, q_a = 4400 psf
f'_c = 3000 psi
f_y = 60,000 psi

Step 1 : Determination of Effective Bearing Pressure (q_a)

Let, bottom of the footing is at 3′ depth from grade. So, D_f = 3′

q_e = (q_a – 125 x D_f) psf
= (4400 – 125 x 3)
= 3775 psf

Step 2 : Determination of Area of Footing

- $A = \frac{DL + LL}{q_e} = \frac{(666.8 + 144.4)10^3}{3775} = 215 ft^2$

With width 14 ft,
Size of the footing = 16 ft x 14 ft

Step 3 : Determination of Bearing Pressure for Strength Design

$$q_u = \frac{1.4DL + 1.7LL}{\ell * b} psf$$

$$= \frac{(1.4 * 666.8 + 1.7 * 144.4)10^3}{16 * 14} = 5263 psf$$

Step 4 : Determination of Effective Depth from Punching Shear Consideration

$$\phi 4\sqrt{f_c'}b_o d = q_u\left[(\ell * b) - \left(\frac{c+d}{12}\right)^2\right]$$

$$\Rightarrow 0.85 * 4 * \sqrt{3000} * 4(16+d)d = 5263\left[16\times 14 - \left(\frac{16+d}{12}\right)^2\right] \Rightarrow \text{d} = 32.5 \approx 33 \text{ inch.}$$

Step 5 : Check for Flexural Shear

- Long Direction

$$\phi V_c = 2\phi\sqrt{f_c'}(12bd)$$

$$= 2 * 0.85 * \sqrt{3000}(12*14*33)$$
$$= 516217 \text{ lb}$$

$$V_u = q_u * b\left[\frac{\ell - c/_{12}}{2} - \frac{d}{12}\right]$$

$$= 5263 \text{ x } 14\left[\left(\frac{16-\frac{18}{12}}{2}\right) - \frac{33}{12}\right]$$

$$= 331519 \text{ lb}$$

$V_u < \phi V_c$, design is ok.

- Short Direction

$$\phi V_c = 2\phi\sqrt{f_c'}(12ld)$$

$$= 2 * 0.85 * \sqrt{3000} * (12 * 16 * 33)$$
$$= 589963 \text{ lb}$$

$$V_u = q_u * \ell\left[\left(\frac{b - c/_{12}}{2}\right) - \frac{d}{12}\right] \text{ lb}$$

$$= 5263 \text{ x } 16\left[\left(\frac{14 - 14/_{12}}{2}\right) - \frac{33}{12}\right]$$

$$= 308762 \text{ lb}$$

$V_u < \phi V_c$ design is ok.

Step 6 : Check for Bending Moment

$$\rho_{max} = 0.75\ \rho_b * 0.85\ \beta_1 \frac{f_c'}{f_y}\left(\frac{87{,}000}{87{,}000 + f_y}\right) = 0.016$$

- Long Direction Moment

$$M_u \ell = \frac{q_u}{8}\left(\ell - c1/_{12}\right)^2 * b \quad \text{lb-ft}$$

$$= \frac{5263}{8}\left(16 - \frac{18}{12}\right)^2 * 14$$

= 1936455 lb-ft

= 23237 k-in

$$d = \sqrt{\frac{12M_u}{\phi\rho_{max} f_y b\left(1 - 0.59\rho_{max}\frac{f_y}{f_c'}\right)12}} \text{ inch}$$

$$= \sqrt{\frac{23237}{0.90*0.016*60x14\left(1 - 0.59*0.016x\frac{60}{3}\right)12}}$$

= 14.05 in.

$d < d_{(provided)}$, design is ok.

- Short Direction Moment

$$M_{u,s} = \frac{q_u}{8}\left(b - C2/_{12}\right)^2 * \ell \quad \text{lb-ft}$$

$$= \frac{5263}{8}\left(14 - \frac{14}{12}\right)^2 * 16$$

= 1733574 lb –ft

= 20803 k-ft

$$d = \sqrt{\frac{20803}{0.90*0.016*60*16\left(1 - 0.59*0.016x\frac{60}{3}\right)12}}$$

= 12.43 in

$d < d_{(provided0}$, design is ok.

Step 7 : Estimation of Thickness

$t_{min} = d + 3 \text{ in} + \frac{1}{2} d_b$

$= 33 + 3 + 0.5 = 27.5 \approx 28$ [Using #8 bar]

Provide, t = 37 in.

Step 8 : Determination of Steel Area for Long Direction ($A_{s,l}$)

For Iteration Method assuming a = 4 inch

Trial	Assumed, a	$A_{s,l} = \frac{M_{u,l}}{\phi f_y (d - a/2)}$ (in^2) [M_u= 23237k-in]	a = $\frac{A_{s,l} f_y}{0.85 f_c' b}$ (in)	Remark
1	11	15.56	2.19	Not ok
2	2.19	13.488	1.89	Not ok
3	1.89	13.42	1.88	ok

A_s= 13.42 in^2

- Check for Minimum Steel

$$A_{s,min} = \frac{3\sqrt{f_c'}}{f_y}(b*12)d = \frac{3\sqrt{3000}(14*12)33}{60{,}000} = 15 \text{ in}^2$$

But not less than

$$A_{s,\,min} = \frac{200}{f_y}(b*12)d = \frac{200}{60{,}000}(14*12)33 = 18.5 \text{ in}^2$$

$A_{s,l} < A_{s,\,min}$

So A_s= 18.5 in^2

- Number of Bar

Select # 9 bar (A_b = 1 in^2)

$$N = \frac{A_{s,l}}{A_b} = \frac{18.5}{1} = 18.5 \approx 19$$

- Spacing

$$S = \frac{bx12}{N} = \frac{14x12}{19} = 8.8 \approx 8.5 \text{ in c/c}$$

Use 19 # 9 bar @ 8.5 in c/c

Step 9 : Determination of Steel Area for Short Direction ($A_{s,s}$)

- Required Steel Area

$$A_{s,s} = \frac{M_{u,s,} * 12}{\phi f_y (d - a/_2)}$$

$$A_{s,s} = \frac{20803}{0.90 * 60(33 - 1.88/2)} = 12 \text{ in}^2$$

- Check for Minimum Steel

$$A_{s,\ min} = \frac{200}{f_y}(\ell * 12)d = \frac{200}{60{,}000}(16*12)33 = 21.12 \text{ in}^2$$

$A_{s,s} < A_{s,\ min}$

Use $A_{s,s} = A_{s,min}$ = 21.12 in^2

- Steel for Band Width

➢ *Steel Area*

$$A_{s,bw} = A_{s,s} \times \left(\frac{2}{\beta+1}\right)\%$$

$$\beta = \frac{16}{14} = 1.143$$

$$\frac{2}{\beta+1} = \frac{2}{1.143+1} = 0.933$$

$A_{s,bw}$= 17.28 x 0.933

= 19.7 in^2

Band width = 14 ft.

- *No of Bar*

Select # 9 bar (A_b = 1 in^2)

No of bar, N = $\frac{A_{s,bw}}{A_b} = \frac{19.7}{1} = 19.7 \approx 20$

- *Spacing*

S = $\frac{bx12}{N} = \frac{14x12}{20} = 8.4 \approx 8$ in c/c

Use 20 # 9 bar 8 in c/c

- Steel for Outside of Band

- *Steel Area*

$A_{s,\ out\ of\ band} = \frac{A_{s,s} - A_{s,bw}}{2} = \left(\frac{21.12-19.7}{2}\right) = 0.54\ in^2$

- *No of Bar*

Select # 6 bar (A_b = 0.44 in^2)

No of bar, N= $\frac{0.54}{0.44} = 1.23 \approx 2$ on each side

- *Spacing*

Spacing, S = $\frac{1x12}{2} = 6$ in c/c

Use 3 # 6 bar 8 in c/c on each side.

Step 10: Reinforcement Detailing

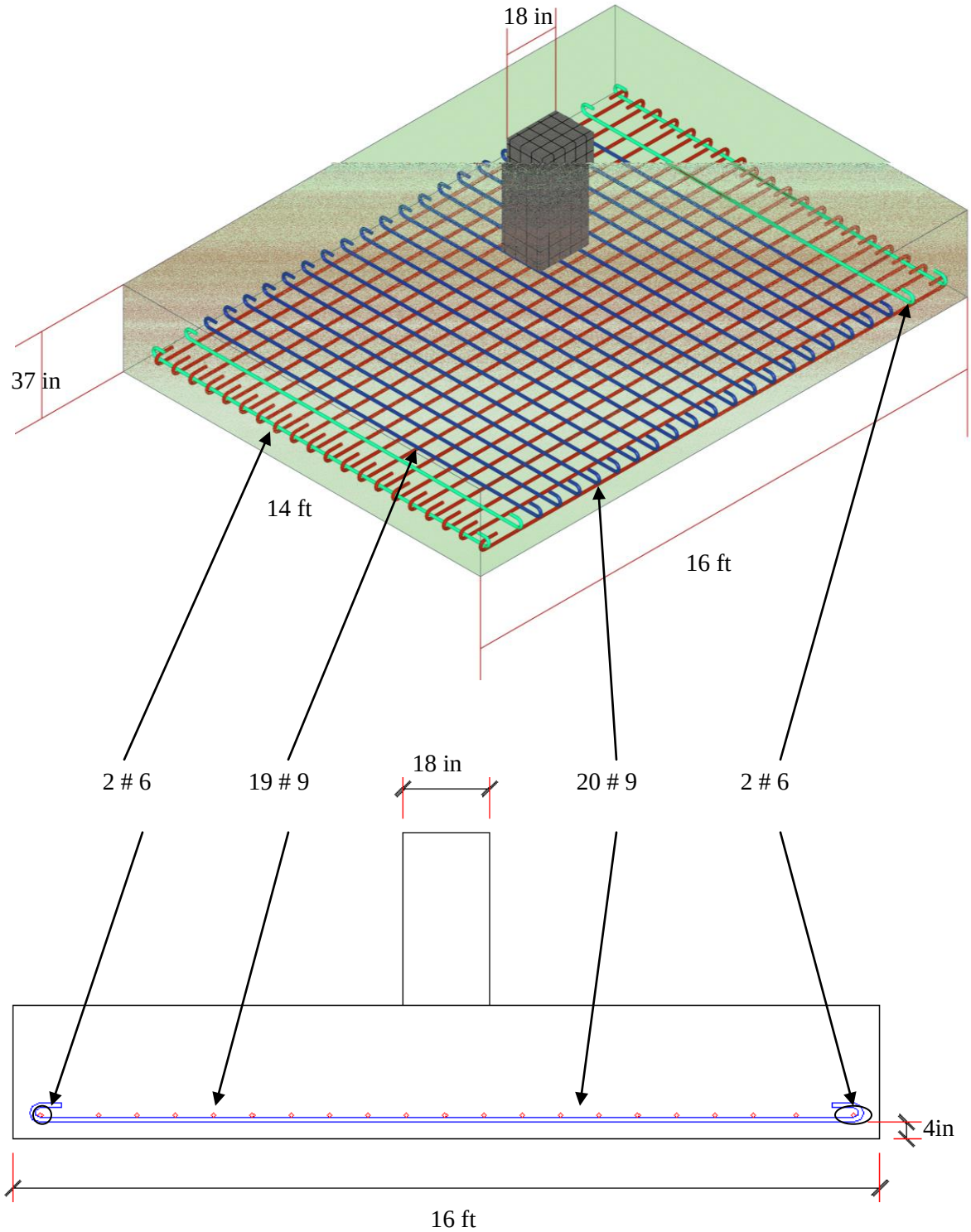

Figure 10.8: Detailing of footing

10.5 DESIGN OF WATER TANK

10.5.1 DESIGN OF A ROOF TOP WATER TANK

Step 1: Water requirement

- Water consumption rate = 40 gpcd.
- Number of persons= no of flats X 6 =12 X 6 =72 persons (considering six persons per flat)
- Total water requirement=72 X 40=288 gal/day

$\therefore$ Daily requirement $= \frac{2880}{6.24} cft \approx 462$ cft/day

Step 2: Tank dimension

- Let inside Dimension

L=15 ft =4.572 m

B =7 ft =2.1336 m

So L/B=15/7>2

- Height of water level= $\frac{462}{15 \times 7} = 4.4$ ft

- Free board = 0.5 ft.

So final height = 4.4+0.5=4.9 ft $\approx$ 5 ft

Step 3:

- Part 1

Here, h =H/4 or 1 m (larger height to be considered)

- Part 2

(H-H/4) or (H-1) m to be considered.

For L/B>2

We have, h = H/4=5/4=1.25 ft $\approx$ 0.381 m <1m

$\therefore$ h =1 m =3.28 ft

Step 4: Design for long wall

Moment M = $\frac{wH^3}{6}$

Here w= 9.81 kN/m^3 $\approx$ 10 kN/m^3

H=5ft=1.524 m

$$\therefore \text{M} = \frac{10 \times 1.524^3}{6} = 5.9 \text{ kN-M}$$

$$= \frac{5.9 \times 1000}{4.448 \times 0.3043} = 4351.35 \text{ lb ft}$$

=4.351 kft

=52.3 kin [1 kn-m= 738.8 lb-ft]

Check for,

$$M_{\max} = \frac{1}{2} f_c kjbd^2$$

$$\Rightarrow d^2 = \frac{52.3 \times 1000}{0.5 \times 1350 \times 0.288 \times 0.904 \times 12}$$

$$\Rightarrow d = 4.98 inch$$

Overall depth=4.98+1+1.5X4/8=6.75 inch (considering # 4 bars)

Here,

$$f_c = 0.45 f_c^{'} = 0.45 \times 3000 = 1350 psi$$

$$f_y = 60 ksi$$

$$f_s = 0.5 f_y = 30 ksi$$

$$n = \frac{E_s}{E_c} = \frac{29 \times 10^6}{57500\sqrt{3000}} \approx 9$$

$$r = \frac{f_s}{f_c} = \frac{30}{1.35} = 22.22$$

$$k = \frac{n}{n+r} = \frac{9}{9+22.22} = 0.288$$

$$j = 1 - \frac{k}{3} = 0.904$$

Let us take overall thickness of wall=7.0 inch
So effective depth =7.0-1-1.5 X4/8=5.25 inch

Then,

$$A_s = \frac{M}{f_s jd} = \frac{52.3 \times 1000}{30000 \times 0.904 \times 5.25} = 0.37 in^2 / ft$$

$A_s(\text{min}) = 0.3\%$ (of cross sectional area)

$$\Rightarrow = \frac{0.3}{100} \times 7.0 \times 12 = 0.252 in^2 / ft$$

So, $A_s = 0.63 in^2 / ft$ (provide # 4 bar @ 4 inch c/c)

Direct tension in the wall, $T_L = w(H-h) \times \frac{B}{2}$

$$= 10(1.524 - 1) \times \frac{2.1336}{2}$$

$$= 5.59 kN/m$$

$$= \frac{5.59 \times 1000 \times 0.3048}{4.448} = 383.06 lb/ft$$

$$\therefore A_s = \frac{T_L}{F_s} = \frac{383.06}{30000} = 0.013 in^2 / ft$$

$A_s(\text{min}) = 0.252 in^2 / ft$

So # 3 bar @ 5 inch c/c to be provided

Since steel is provided on both faces therefore steel to be provided on both faces as # 3 bar @ 10 inch c/c.

Step 5: Design for short wall

- Force P=w(H-h)=10 X(1.524-1)= 5.24 kN/m^2 =359.07 lb/ft (per m run)
- Effective span in horizontally spaced slab=7+6.5/12=7.54ft=2.3 m
- Bending moment at end, M= $\frac{Pl^2}{12} = \frac{w(H-h)B^2}{12}$

$$\therefore M = \frac{5.24 \times 2.31^2}{12} = 2.33 \text{KN-m (per m run)}$$

=1721.83 lb ft=20.66k in (per ft run)

- Reduction in moment due to tensile steel

= T_x=383.06 x 1.5/12=47.88 lb ft=0.575 k in

- Design moment

Design moment = M-T_x
= 20.66-0.575
= 20.1 k-in

- Steel requirement

$$A_s = \frac{M - Tx}{f_s jd} = \frac{20.1}{30 \times 0.904 \times 5.25} = 0.14 in^2 / ft$$

$$A_s(\text{min}) = 0.252 in^2 / ft$$

$$\therefore A_s = 0.252 in^2 / ft$$

We will use # 3 bar @ 5 inch c/c.

- At mid section

$$M = \frac{PL^2}{24} = \frac{1}{2} \times \frac{5.24 \times 2.31^2}{12} = 10.33 kin$$

$$\therefore A_s = \frac{10.33}{30 \times 0.904 \times 5.25} = 0.07 in^2 / ft < A_s(\text{min})$$

So A_s will be provided as # 3 bar @ 5 in c/c at mid section.

Step 6: Cantilever effect on short column

- Maximum moment

$$M_{\max} = \frac{wHh^2}{6} kN.m = \frac{10 \times 1.524 \times 1^2}{6} = 2.54 kN.m$$

=1873.50 lb ft
=22.5 k-in

- Steel requirement

$$A_s = \frac{M}{f_s jd} = \frac{22.5}{20 \times 0.904 \times 5.25} = 0.16 in^2 / ft > A_s(\text{min}) = 0.252 in^2 / ft$$

So use # 3 bar @ 5 inch c/c.

Step 7: Design of base slab

- L/B>2, so we will design for one way slab
- Minimum thickness

$$t = \frac{L}{20} = \frac{15\times 12}{20} = 9in \text{ (For 60 grade steel)}$$

- Let thickness = 9 inch

$$\text{Total weight of base slab} = \frac{9}{12}\times 150 + (62.5 \div 1000)\times 5 = 0.425 \text{ ksf}$$

$$\text{Effective width, B} = 7 + 2\times\frac{9}{12\times 2} = 7.75 \text{ ft}$$

- Moments, $M_{\max} = 0.425\times\frac{7.75^2}{8} = 3.19$ kft=38.29 k-in
- Depth $d = \sqrt{\frac{38.29}{0.9\times 1.35\times 0.904\times 0.288\times 12}}$ =3.17 inch (OK)

$$\therefore A_s = \frac{38.29}{20\times 0.904\times 5.25} = 0.27 in^2/ft$$

$$\left[d = 7 - 1 - 1.5\times\frac{4}{8} = 5.25 inch\right]$$

Use # 3 bar @ 4.5inch c/c. So # 3 bar @ 9 inch c/c should be used at each face.

Step 8: Detailing

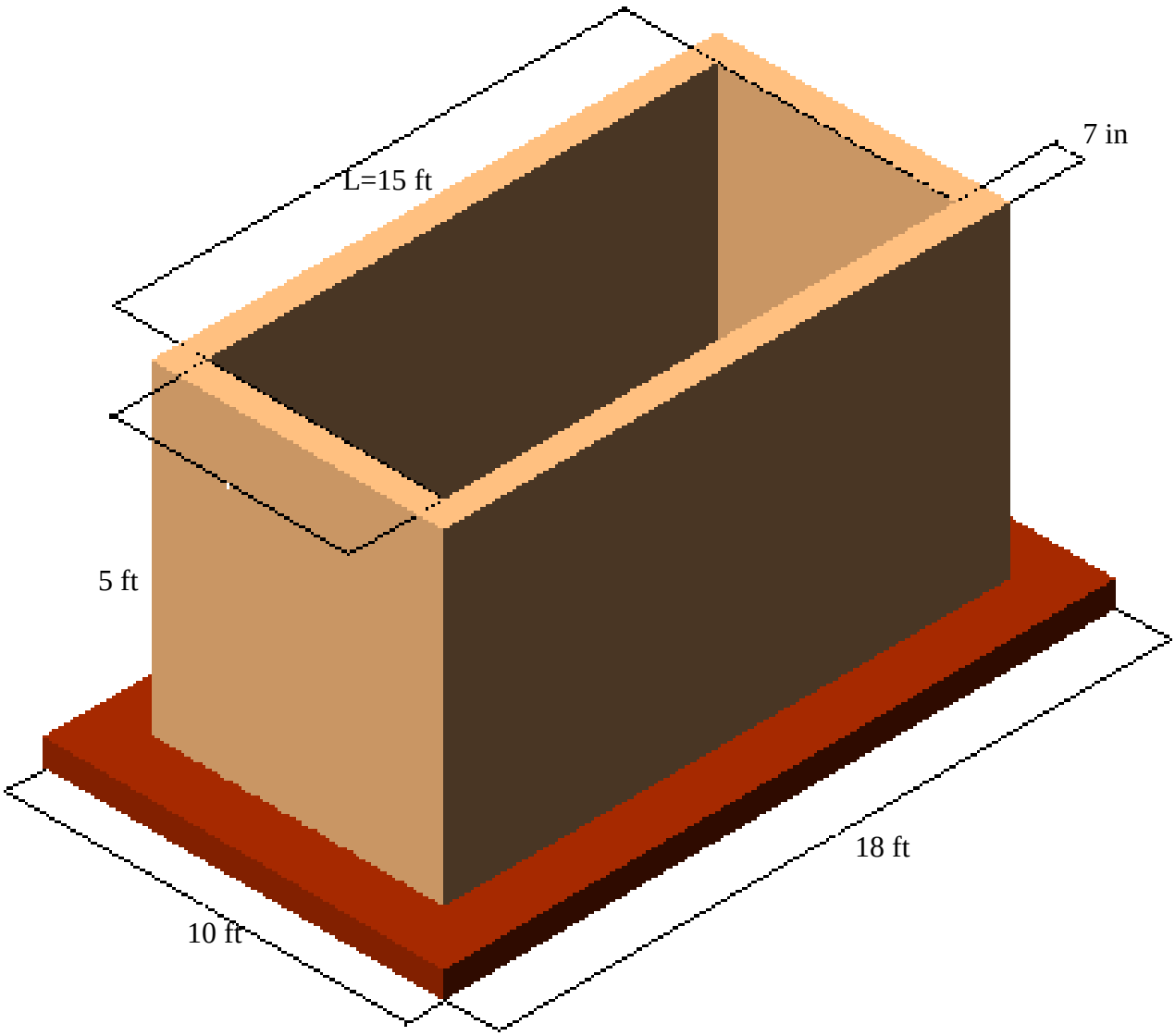

Figure 10.9: Detailing of over head water tank

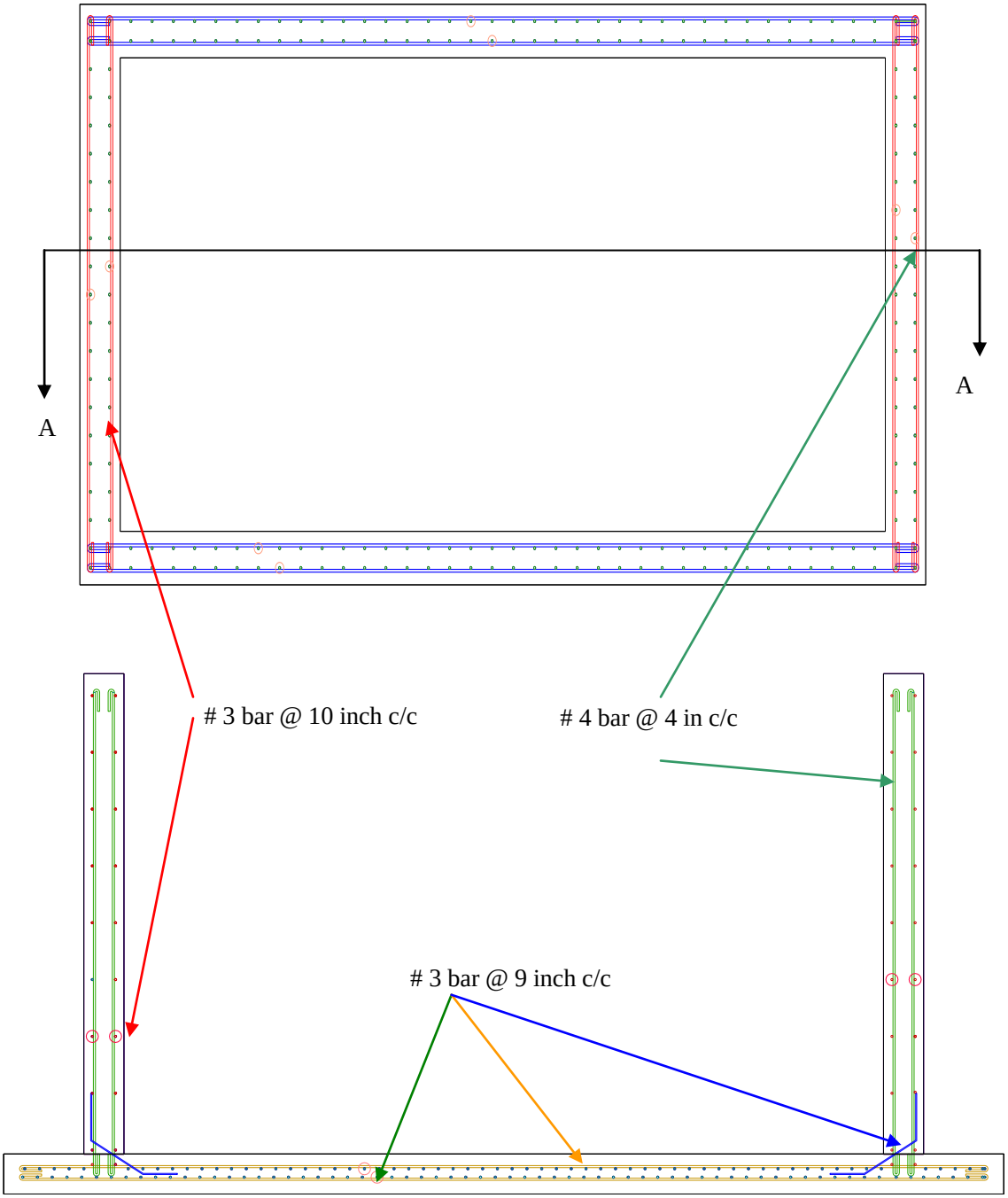

Section A-A

Figure 10.9: Detailing of over head water tank (continued)

10.5.2 DESIGN OF UNDERGROUND WATER TANK

General data

- Volume to be stored= $2\times462=924$cft
  (For two days store daily requirement 462 cft)
- Angle of repose $\phi_{dry}=30^{\circ},\phi_{wet}=6^{\circ}$
- Unit weight of soil=w=125 pcf=20 kN/m^2
- Most critical condition: Empty water tank and wet soil.

Step 1: Tank dimension

Let inside dimension, L=15 ft=4.512 m.
B=7 ft=2.1336 m.

So height of water level= $\frac{924}{15\times7}=8.8\,ft$

Free board=0.3 ft

Final height=8.8+0.5=9.3ft $\approx$ 2.896 m.

Step 2: Design of long walls

- Pressure exerted by wet soil $=wh\frac{1-\sin\theta}{1+\sin\theta}$

$$=20\times2.896\times\frac{1-\sin6}{1+\sin6}=46.96kN/m^2$$

$\therefore\ p=46.96kN/m^2$

- Tension near the water face= $\frac{ph^2}{33.5}=\frac{46.96\times2.896^2}{33.5}=11.76$ kN.m

$$=\frac{11.76\times1000}{4.448\times0.3048}\times\frac{12}{1000}$$
$$=104.05k-in$$
(Per inch run)

So tension near water face/ ft run=104.05 X0.3048=31.72 kip inch

- Tension away from water face

$$M_{\max} = \frac{ph^2}{15} = \frac{46.96 \times 2.896^2}{15} = 26.26 \text{ kN/m}$$

=232.8 k-in (per inch run)
=70.96 kin (per ft run)

- From cracking consideration the thickness of wall is determined.

$$M = \frac{F_{ct} \times bD^2}{6}$$

$$\therefore D^2 = \frac{6M}{f_{et} \times b} = \frac{6 \times 70.80}{0.411 \times 12} = 86.18 in^2$$

D=9.28 in $\approx$ 9.5 in

Here $f_{ct} = (6 \rightarrow 8)\sqrt{f_{c'}}$

Let, $f_{ct} = 7.5\sqrt{f_{c'}} = 7.5 \times \sqrt{3000} = 411 psi$

$M_{\max}$ = 70.84 k-in

D= Total thickness

$\therefore$ Effective depth =9.5-1.5=8 inch

$\therefore$ d=8 inch

Step 3: Vertical reinforcement (long walls)

- Steel requirement, $A_s = \frac{M}{f_s jd} = \frac{70.84}{30 \times 0.904 \times 8} = 0.33 in^2 / ft$

$A_s(\text{min}) = .003bt = .003 \times 12 \times 9.5 = 0.342 in^2 / ft$

$A_s = 0.33 in^2 / ft$

So use # 4 bar @ 7 inch c/c (inner force)

- Steel requirements for M=31.72 kip in

$$A_s = \frac{31.72}{30 \times 0.904 \times 8} = 0.15 in^2 / ft < A_s(\text{min})$$

$$\therefore A_s = 0.342 in^2 / ft$$

So use # 4 bar @ 7 inch c/c (Outer force)

Step 4: Horizontal reinforcement (long walls)

- Minimum steel requirements

$$A_s(\min) = .003bt = 0.342in^2 / ft$$

Use # 4 bar @ 7 inch c/c

Step 5: Design of short wall

- Earth pressure at the bottom P=46.96 kN/m^2

- Max moment at the center M=$\frac{PL^2}{12}$

$$\therefore M = \frac{46.96 \times 2.375^2}{12}$$

=22.07 kin (per m length)
=195.35k-in (per in length)
=59.55 k-in (per ft length)

$$L = 7 + \frac{9.5}{12} = 7.79\,ft = 2.375\,\text{m}$$

Now

$$M_{\max} = \frac{f_c}{2} kjbd^2$$

$$\Rightarrow d = \sqrt{\frac{2 \times 195.36}{1.35 \times 0.37 \times 0.874 \times 3.28 \times 12}} = 5.3inch < 8inch$$

Step 6: Vertical reinforcement (short wall)

$$A_s = \frac{M}{f_s jd} = \frac{59.55}{30 \times 0.904 \times 8} = 0..275in^2 / ft$$

Use # 4 bar @ 8 inch c/c.

Step 7: Horizontal reinforcement (short wall)

$A_s(\min) = 0.342 in^2 / ft$

Use # 4 bar @ 7 inch c/c that is 14 inch c/c both side.

Step 8: Design of base slab

- Thickness provided=9.5 inch (let)
- Minimum reinforcement=0.003bt=0.342 in^2 / ft

Use # 4 bar @ 7 inch c/c.

Step 7: Detailing

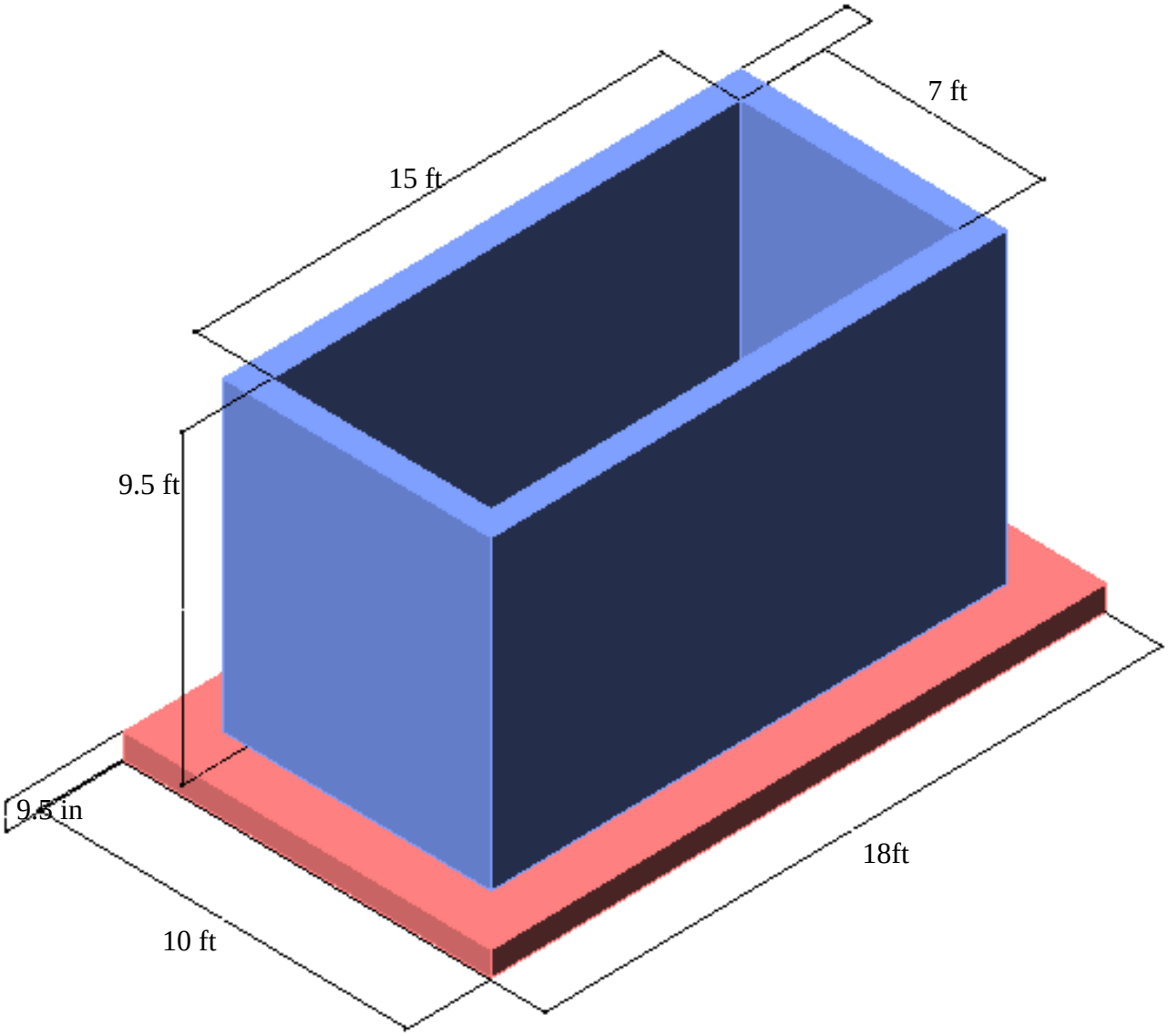

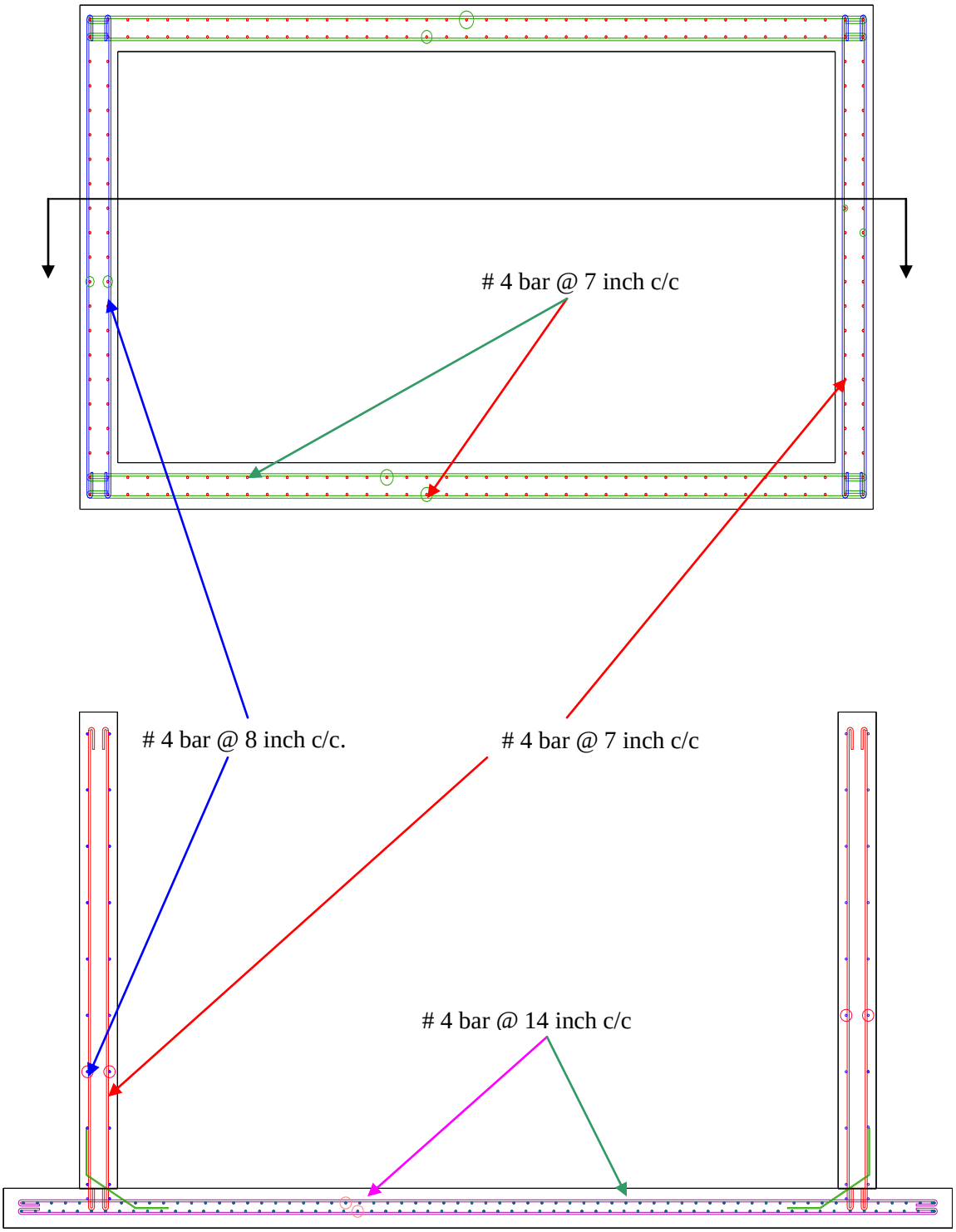

Figure 10.10: Detailing of under ground water tank (continued)

10.6 DESIGN OF SHEAR WALL

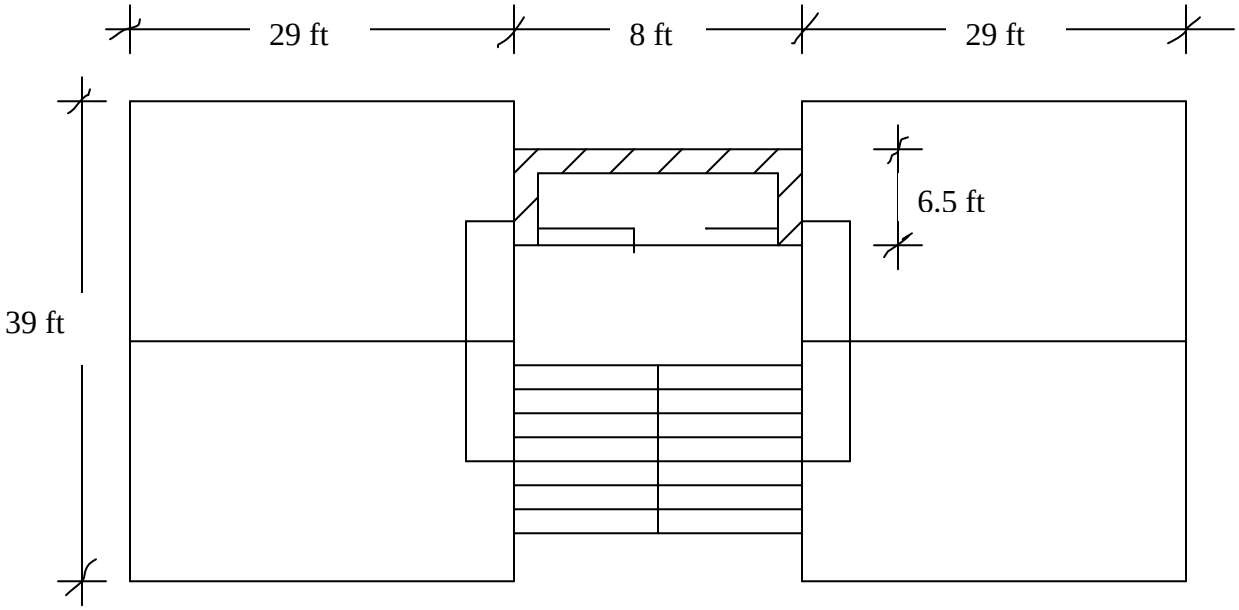

Figure 10.11: Plan of a floor

Given data:

- 6 storied building.
- Height of each floor 10 ft.
- Maximum wind pressure per sft= 10 lbs
- Zone 1
- R_w =4
- Total seismic load 20 kips/ft.
- I= Importance factor =1.25.

Step 1: Horizontal loads on the structure

- Wind loads

$$F_w = (2 \times b \times windpressure)$$
$$= 2 \times 66 \times 10 = 1320 \text{ lb/ft} = 1.32 \text{ kips/ft}$$

- Seismic loads

$$V = \frac{ZIC}{R_w} W$$

Where,
W= Total seismic load 20 kips/ft
$R_w = 4$
Z=0.075
I=1.25

Now $C = \dfrac{1.25S}{T^{\frac{2}{3}}}$ $\quad \left[\begin{array}{l} T = C_t (h_n)^{\frac{3}{4}} \\ T = 0.02 \times 60^{\frac{3}{4}} = 0.431 \end{array} \right]$

$\therefore C = \dfrac{1.25 \times 1}{(0.431)^{\frac{2}{3}}}$ [s=1 for stiff soil]

=2.19

$$\therefore V = \frac{0.075 \times 1.25 \times 2.19}{4} \times 20 = 1.02$$

$$F_t = 0.25V = 0.26$$

$$F_e = \frac{(1.02 - 0.26) w_x h_x}{\sum w_x h_x} = \frac{(1.02 - 0.26) \times 60}{10 \times \frac{10 \times (10+1)}{2}} = 0.083 \quad (w_x = \sum w_x)$$

Step 2: Calculation of moment for vertical flexural reinforcement

$$M_u = \frac{1}{6} \times 1.4 \times 60 \times 60 = 840 \text{ ft-kips}$$

$$M_u = \frac{1}{2} \times 1.4 \times 60 = 42 kip$$

Step 3: Design of vertical flexural reinforcement

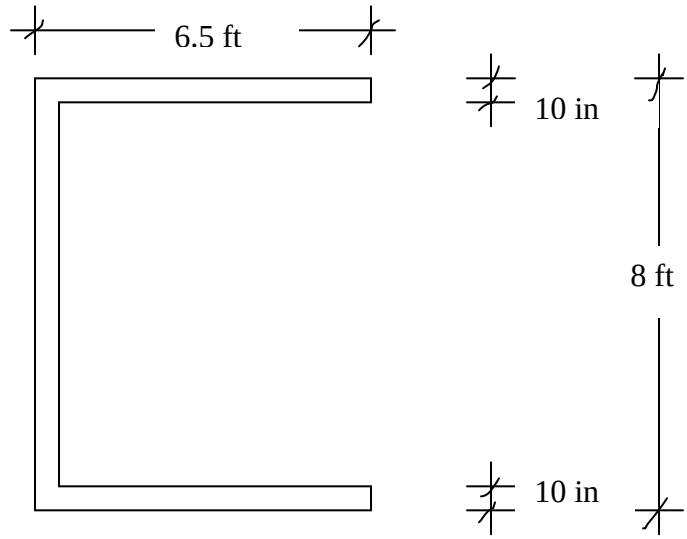

Figure 10.12: Shear Wall Cross Section

- Balanced steel ratio

$$\rho_b = 0.85 \times 0.85 \times \frac{3}{60} \times \frac{87}{147} = 0.021$$

$$\rho_{\max} = 0.75 \times 0.021 = 0.016$$

- Area of steel if singly reinforced

$$A_{s_1} = \rho_{\max} bd = 0.016 \times 6.5 \times 12 \times (96-5) = 113.57 in^2$$

Then $a = \dfrac{A_{s_1} f_y}{0.85 \times f_{c'} b} = \dfrac{113.57 \times 60000}{0.85 \times 3000 \times 6.5 \times 12} = 34.27 in$

- Maximum moment that can be developed

$$M_{n_1} = A_s f_y \left(d - \frac{a}{2}\right) = 113.57 \times 60 \left(91 - \frac{34.27}{2}\right) = 503330 \text{ in-kips}$$

=41944 ft-kips > M_u [So no compression steel.]

- Using ρ minimum

$$A_{s\min} = \frac{3 \times \sqrt{3000}}{60000} \times 6.5 \times 12 \times 91 = 19.4 in^2 \geq \frac{200 b_w d}{f_y} = \frac{200 \times (6.5 \times 12) \times 91}{60000} = 23.66 in^2$$

Now using $A_{s_1} = 23.66in^2$ maximum moment that can be developed is

$$M_{n_1} = 23.66 \times 60\left(91 - \frac{5.73}{2}\right) = 98308kip - in = 8192\,\text{ft- kips} > M_u$$

As, $a = \dfrac{23.66 \times 60000}{0.85 \times 3000 \times 6.5 \times 12} = 7.14in$

Therefore $A_s = 23.66in^2$ which can be provided by 11#14 bars in back face and with 24.75 square inch of steel area.

Step 4: Shear reinforcement

Values of V_c:

$V_c = 2\sqrt{f_{c'}}hd = 2 \times \sqrt{3000} \times 6.5 \times 12 \times 91 = 777.5$ Kip.
Shear V_u in no case exceed $\phi V_c = 0.85 \times 777 = 660$ kips.
Therefore minimum shear reinforcement should be provided in the flange.

Horizontal shear reinforcement:

Maximum spacing,

$S_2 \le \dfrac{l_w}{5}$, 3h or 18 in

$S_2 \le 15.6$, 288 or 18 in

So, $S_2 = 18$ inch (can be provided by # 3 bars)

Vertical shear reinforcement:

Maximum spacing

$S_1 \le \dfrac{l_w}{3}$, 3 h or 18 in

$S_1 \le 15.6$ in, 288 in or 18 in

So, S_1=18 in (can be provided by # 3 bars)

Step 5: detailing

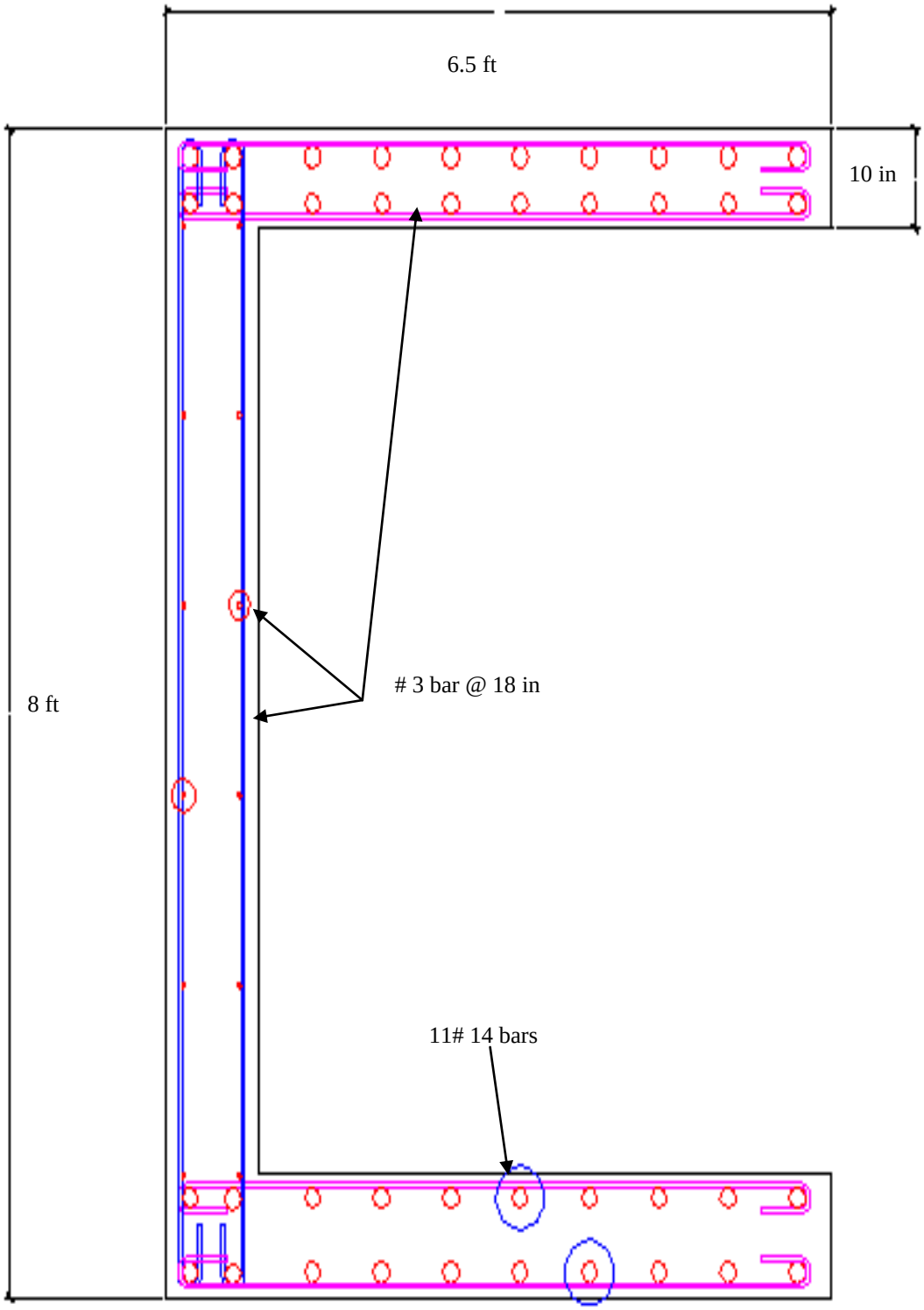

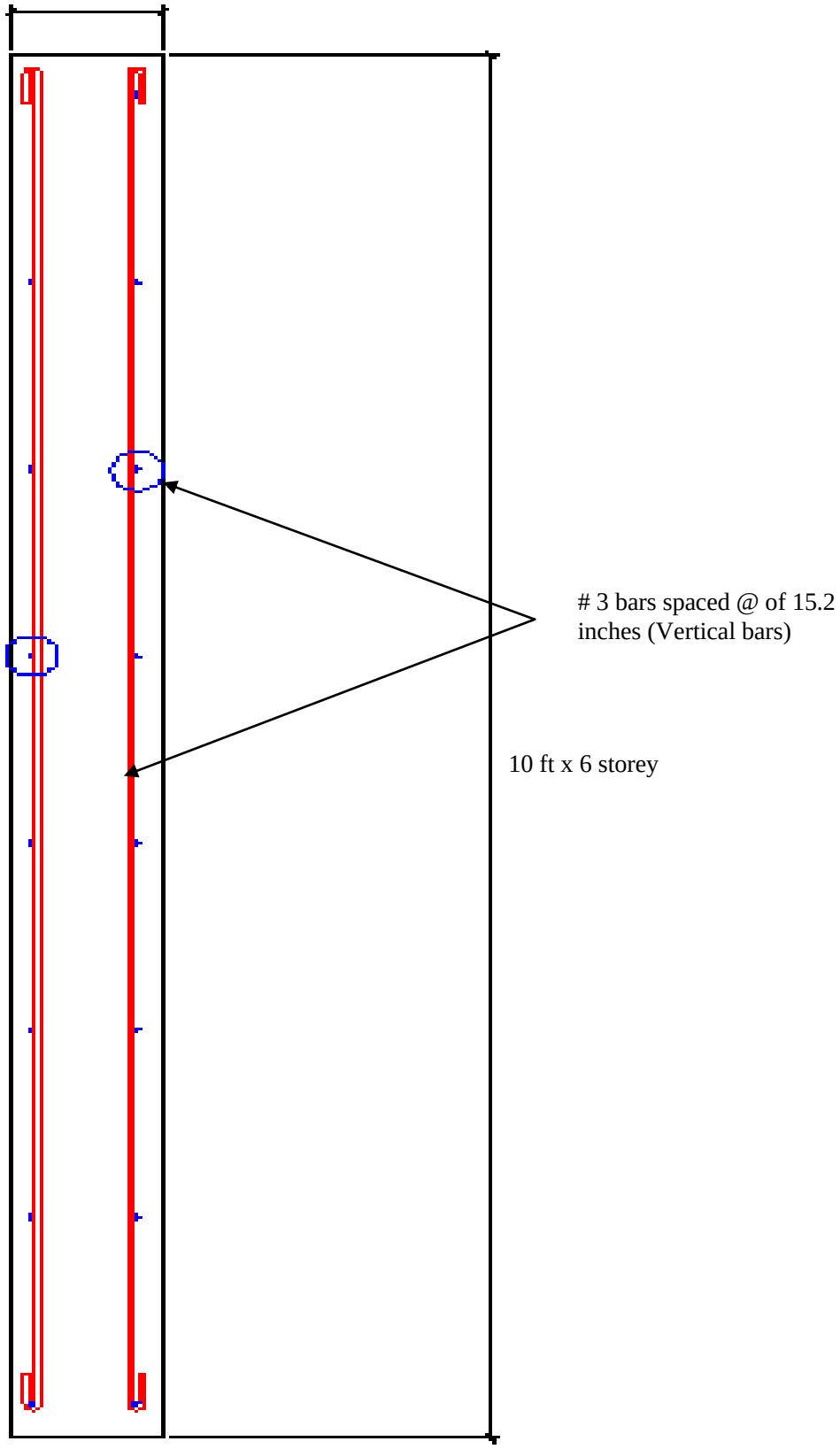

Figure 10.13: Detailing of shear wall (continued)

10.7 DESIGN OF DOGLEGGED STAIR CASE

Step 1: General arrangement

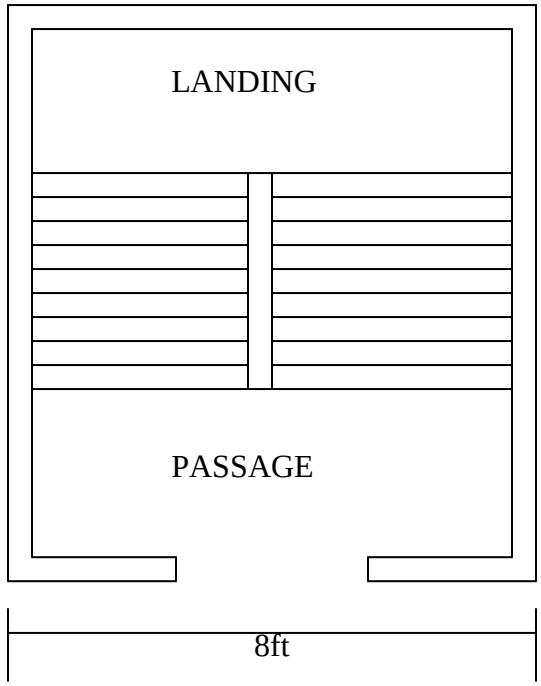

Figure 10.14: Dog legged stair case (general arrangement)

The figure above shows the plan of the stair hall. Let the rise be 6 inch and trade be 6.5inch. The width of each flight is 7.5/2=3.75ft

Height of each flight $= \frac{10}{2} = 5$ ft.

No of risers required $= \frac{5 \times 12}{6} = 10$ risers in each flight.

No of tread in each flight = 10-1 = 9.

Space occupied be trades = 9×10=90in= 7.5 ft.

Width of landing =6.25 ft.

Width of passage =6.25ft.

Size of stair hall = 7.5 ft $\times$ 20 ft.

Step 2: Design constants

For steel f_y = 60,000 psi

And for concrete $f_{c'}$ = 3000 psi

Step 3: Determination of loading

The landing slab acts together with the going as a single slab. The bearing of the slab into the wall may be considered 8 inch.

Then the effective span = $7.5 + 6.25 + \frac{8}{12} = 17.75$ ft.

Considering one-way slab with both end continuous minimum thickness is $\frac{l}{28}$.

So, t = $\frac{l}{28} = \frac{17.75 \times 12}{28} = 7.6 inches \approx 8 in$ inches.

- Self weight of the slab = $\frac{8}{12} \times 150 \times 1$ = 100 plf.
- Self weight of the steps = $\left(\frac{1}{2} \times \frac{Tread}{12} \times \frac{Riser}{12} \times 150\right) \div \frac{Tread}{12}$

  $= \left(0.5 \times \frac{10}{12} \times \frac{8}{12} \times 150\right) \div \frac{10}{12}$

  =50 plf.

- Floor finish = 20 plf.

Total dead load =100+50+20=170plf

Live load = 100 plf.

So, Design factored load = $1.4 \times 170 + 1.7 \times 100$=408 plf.

Step 4: Bending Moment Calculation

- Maximum Moment

$$M_{\max} = \frac{wl^2}{8} = \frac{1}{8} \times 408 \times 17.75^2 = 16068 \text{ lb-ft} = 192.8 \text{ k-in.}$$

- Check for depth

$$\rho_{\max} = 0.75\rho_b = 0.75 \times 0.85 \times 0.85 \times \frac{3}{60} \times \frac{87}{87+60} = 0.016$$

$$d^2 = \frac{M_{\max}}{\phi \rho f_y b \left(1 - 0.59\rho \frac{f_y}{f_c}\right)}$$

$$= \frac{192.8}{0.9 \times 0.016 \times 60 \times 12 \times \left(1 - 0.59 \times 0.016 \times \frac{60}{3}\right)}$$

$\therefore$ d =4.8 inch

And t = 4.8+1=5.8 inch (with 1 inch clear cover)

t =5.8 inch < 8 inch (Ok)

$d_{available}$ = 8-1 = 7 inch

Step 5: Reinforcement Calculation

- Distribution Bar.

Minimum reinforcement is provided as temperature and shrinkage reinforcement.
Temperature and shrinkage reinforcement,

$$A_{st} = 0.0018 \times b \times t = 0.0018 \times 12 \times 8 = 0.173 in^2 / ft$$

3 bar can be used.

The spacing will be,

$$S = \frac{0.11 \times 12}{0.173} = 7.63 = 7.5 \text{ inch c/c.}$$

- Longitudinal Steel.

This is selected by trial.

Trial No	Assumed 'a' (inch)	Steel Area, $A_s = \dfrac{M}{\phi f_y\left(d - \dfrac{a}{2}\right)}$ $(inch^2)$	$a = \dfrac{A_s f_y}{0.85 f_{c'} \times b}$ $(inch)$	Comments
Trial-1	a=1.0	0.55	1.07	nearly Ok
Trial-2	a=1.07	0.55	1.08	Ok

So, $A_s = 0.55 inch^2$ is provided.

It can be furnished by using # 4 bar.

Spacing $= \dfrac{0.22 \times 12}{0.55} = 4.8 \approx 4.5$ inch center to center
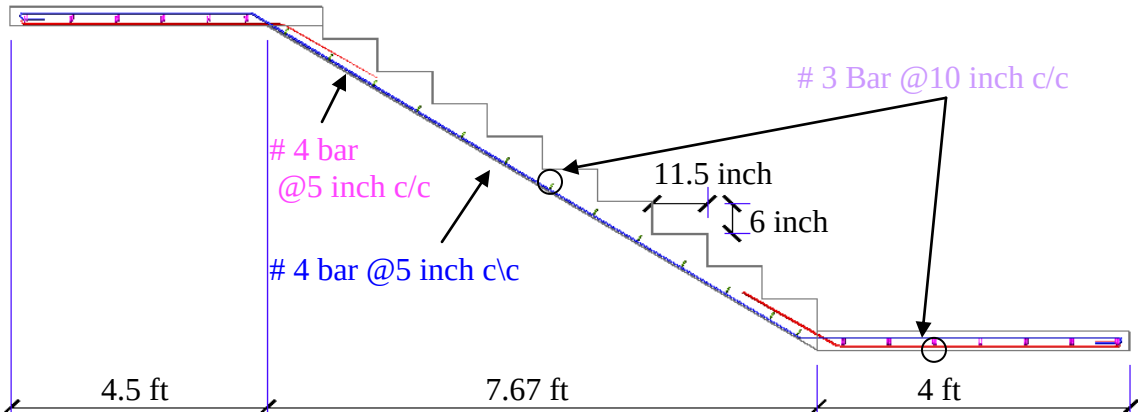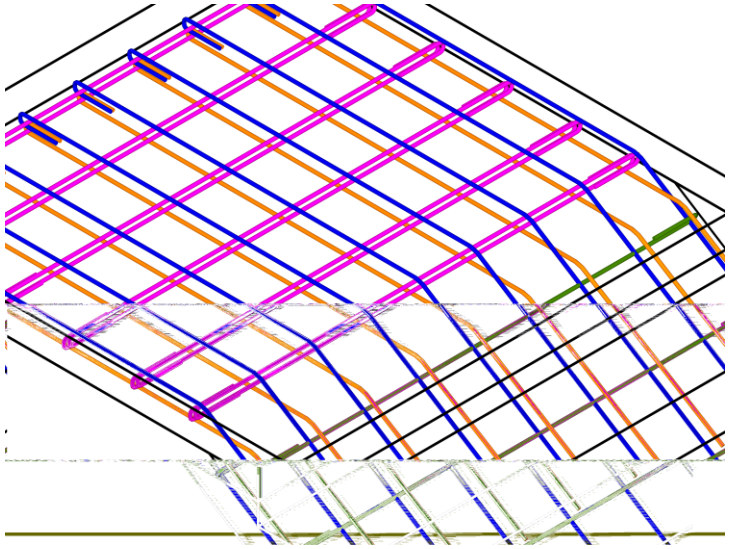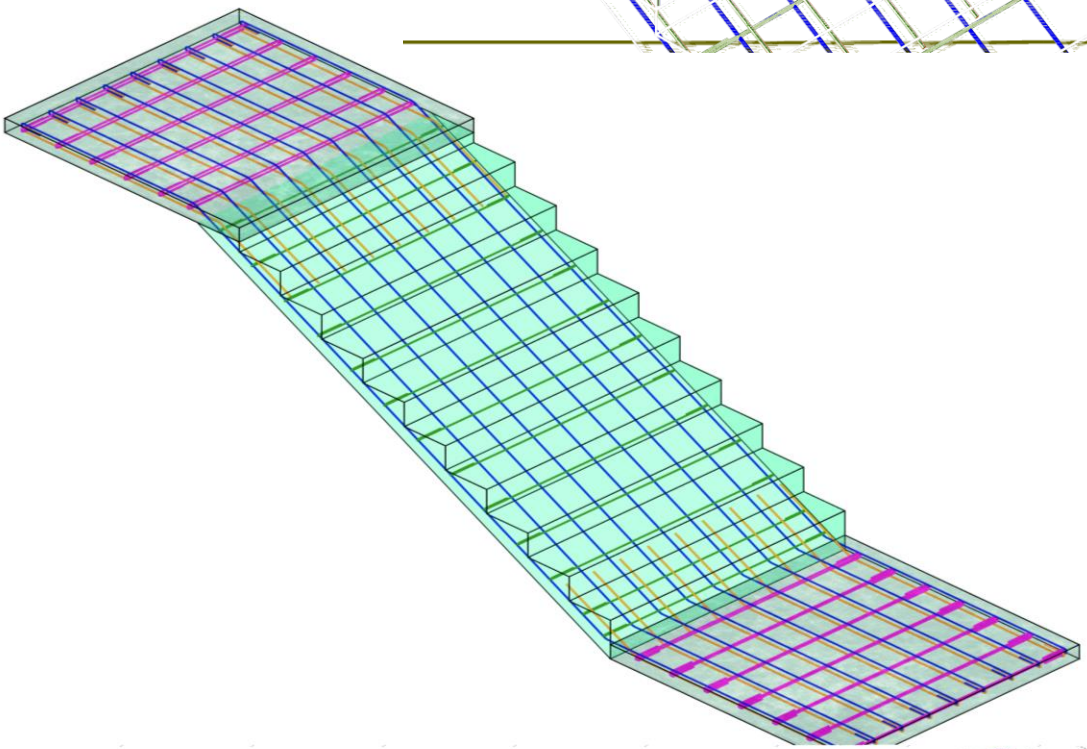
Step 6: detailing